PARK PLACE
COMMUNITY DEVELOPMENT DISTRICT
BOARD OF SUPERVISORS
REGULAR MEETING
MAY 17, 2017

PARK PLACE
COMMUNITY DEVELOPMENT DISTRICT AGENDA
MAY 17, 2017 at 4:00 p.m.

The Lake House located at 11740 Casa Lago Lane, Tampa, Florida 33626

District Board of Supervisors	Chairman	Doris Cockerell
	Supervisor	Tony Jones
	Supervisor	Cathy Kinser-Powell
	Supervisor	Erica Lavina
	Supervisor	Andrea Jackson
District Manager	Meritus Districts	Brian Lamb Brian Howell
District Attorney	Straley & Robin, PA	John Vericker
District Engineer	Stantec, Inc.	Tonja Stewart

All cellular phones and pagers must be turned off while in the meeting room

The District Agenda is comprised of four different sections:

The meeting will begin at **4:00 p.m.** with the first section is called **Supervisor Requests and Audience Comments**. This is the section in which the Supervisors may request Staff to prepare certain items in an effort to meet residential needs. The Audience Comment portion of the agenda is where individuals may comment on matters that concern the District. Each individual is limited to **three (3) minutes** for such comment. **Vendor and Staff Reports**. This section will allow Vendors and District Engineer and Attorney to update Board on work and to present proposals. The next section is called **Business Items.** The business items section contains items for approval by the District Board of Supervisors that may require discussion, motion and votes on an item-by-item basis. If any member of the audience would like to speak on one of the business items, they will need to register with the District Administrator prior to the presentation of that agenda item. Occasionally, certain items for decision within this section are required by Florida Statute to be held as a Public Hearing. During the Public Hearing portion of the agenda item, each member of the public will be permitted to provide one comment on the issue, prior to the Board of Supervisors' discussion, motion and vote. The next section called **Business Administration**. The Business Administration section contains items that require the review and approval of the District Board of Supervisors as a normal course of business. The next section will be **Management Reports.** This section allows the District Manager and Staff to update the Board of Supervisors on any pending issues that are being researched for Board action. Agendas can be reviewed by contacting the Manager's office at (813) 397-5120 at least seven days in advance of the scheduled meeting. Requests to place items on the agenda must be submitted in writing with an explanation to the District Manager at least fourteen (14) days prior to the date of the meeting. The Board of Supervisors or Staff is not obligated to provide a response until sufficient time for research or action is warranted. IF THE COMMENT CONCERNS A MAINTENANCE RELATED ITEM, THE ITEM WILL NEED TO BE ADDRESSED BY THE DISTRICT ADMINSTRATOR OUTSIDE THE CONTEXT OF THIS MEETING.

Public workshops sessions may be advertised and held in an effort to provide informational services. These sessions allow staff or consultants to discuss a policy or business matter in a more informal manner and allow for lengthy presentations prior to scheduling the item for approval. Typically no motions or votes are made during these sessions.

Pursuant to provisions of the Americans with Disabilities Act, any person requiring special accommodations to participate in this meeting is asked to advise the District Office at (813) 397-5120, at least 48 hours before the meeting. If you are hearing or speech impaired, please contact the Florida Relay Service at 1 (800) 955-8770, who can aid you in contacting the District Office.

Any person who decides to appeal any decision made by the Board with respect to any matter considered at the meeting is advised that this same person will need a record of the proceedings and that accordingly, the person may need to ensure that a verbatim record of the proceedings is made, including the testimony and evidence upon which the appeal is to be based.

May 17, 2017

Board of Supervisors
Park Place Community Development District

Dear Board Members:

The Regular Meeting of the Board of Supervisors of the Park Place Community Development District will be held on **Wednesday, May 17, 2017 at 4:00 p.m.** at the Lake House located at 11740 Casa Lago Lane, Tampa, Florida 33626. The agenda is included below.

1. **CALL TO ORDER/ROLL CALL**
2. **SUPERVISOR REQUESTS AND AUDIENCE QUESTION AND COMMENT ON AGENDA ITEMS**
3. **VENDOR AND STAFF REPORTS**
   - A. District Engineer
   - B. District Counsel
   - C. District Manager Report ..... Tab 01
     - i. Action Item List
     - ii. Community Inspection Reports
     - iii. Speed Data
4. **BUSINESS ITEMS**
   - A. Discussion on Highland Park Playground Table Proposals ..... Tab 02
   - B. Discussion on Boardwalk Repairs ..... Tab 03
   - C. Consideration of Resolution 2017-02; Approving Proposed Fiscal Year 2018 Budget & Setting Public Hearing ..... Tab 04
   - D. Acceptance of the 2016 Year End Financial Audit ..... Tab 05
   - E. Consideration of Resolution 2017-03; Re-Designating of Treasurer ..... Tab 06
   - F. Annual Disclosure of Qualified Electors ..... Tab 07
   - G. Appointment of Audit Committee
   - H. General Matters of the District
5. **BUSINESS ADMINISTRATION**
   - A. Consideration of Minutes of the Board of Supervisors Meeting April 19, 2017 ..... Tab 08
   - B. Review of Financial Statements Month Ending April 30, 2017 ..... Tab 09
6. **SUPERVISOR REQUESTS**
7. **AUDIENCE QUESTION AND COMMENT ON OTHER ITEMS**
8. **ADJOURNMENT**

We look forward to seeing you at the meeting. In the meantime, if you have any questions, please do not hesitate to call us at (813) 397-5120.

Sincerely,

Brian Lamb
District Manager

Action Item Template

Date	May 1 2017
Distric	Park Place

#	Action Item Description	Respon sible	Open Date	Date Due	Closed Date	Status	Comments
1	Speed Tables	TS	April	May meeting		open	Tonja will review process with board to move project forward.
2	Sidewalks	TS	Jan	May meeting		open	Tonja will update
4	Sign Poles on RTR	TS	Jan	May meeting		open	BOS will review info and look to do in the fall.
5	Landscape Proposals	BH	March	May		open	Brightview to update BOS.
6	Aquatics	BH	April	May meeting		done	See service tickets
7	Christmas Lighting	BH	April	May meeting		open	Proposal will be in June book
8	Landscape Maintenance Contracts	BH	March	May meeting		done	
8	Picnic Table for HP Playground	BH	March	May meeting		open	See enclosed proposal

MERITUS

MONTHLY LANDSCAPE MAINTENANCE INSPECTION GRADESHEET

Site: Mandolin Estates

Date: Tuesday, May 9, 2017

	MAXIMUM VALUE	CURRENT VALUE	CURRENT DEDUCTION	REASON FOR DEDUCTION
LANDSCAPE MAINTENANCE				
TURF	5	4	-1	Good condition
TURF FERTILITY	10	10	0	Overall Ok
TURF EDGING	5	5	0	Good condition
WEED CONTROL - TURF AREAS	5	4	-1	Minor
TURF INSECT/DISEASE CONTROL	10	10	0	None observed
PLANT FERTILITY	5	5	0	Overall Ok
WEED CONTROL - BED AREAS	5	4	-1	Good condition
PLANT INSECT/DISEASE CONTROL	5	4	-1	Possible mites
PRUNING	10	9	-1	Good condition
CLEANLINESS	5	5	0	Overall Ok
MULCHING	5	5	0	Good condition
WATER/IRRIGATION MGMT	8	8	0	Overall Ok
CARRYOVERS	5	3	-2	Dollar weed
SEASONAL COLOR/PERENNIAL MAINTENANCE				
VIGOR/APPEARANCE	7	7	0	Overall ok
INSECT/DISEASE CONTROL	7	7	0	
DEADHEADING/PRUNING	3	3	0	
SCORE	100	93	-7	93%

Contractor Signature: Brian Howell 5/9/2017

Manager's Signature:

Supervisor's Signature:

MERITUS

MONTHLY MAINTENANCE INSPECTION GRADESHEET

Site: Mandolin (all areas)

Date: Tuesday, May 9, 2017

	MAXIMUM VALUE	CURRENT VALUE	CURRENT DEDUCTION	REASON FOR DEDUCTION
AQUATICS				
DEBRIS	25	23	-2	Overall ok
INVASIVE MATERIAL (FLOATING)	20	17	-3	Algae/duckweed Lilies being treated
INVASIVE MATERIAL (SUBMERSED)	20	16	-4	Torpedo grass Primrose
FOUNTAINS/AERATORS	20	20	0	Not applicable
DESIRABLE PLANTS	15	12	-3	Overall ok
AMENITIES				
CLUBHOUSE INTERIOR	4	4	0	Not applicable
CLUBHOUSE EXTERIOR	3	3	0	Not applicable
POOL WATER	10	10	0	Not applicable
POOL TILES	10	10	0	Not applicable
POOL LIGHTS	5	5	0	Not applicable
POOL FURNITURE/EQUIPMENT	8	8	0	Not applicable
FIRST AID/SAFETY ITEMS	10	10	0	Not applicable
SIGNAGE (rules, pool, playground)	5	5	0	Not applicable
PLAYGROUND EQUIPMENT	5	5	0	Not applicable
RECREATIONAL FACILITIES	7	7	0	Not applicable
RESTROOMS	6	6	0	Not applicable
HARDSCAPE	10	10	0	Not applicable
ACCESS & MONITORING SYSTEM	3	3	0	Not applicable
IT/PHONE SYSTEM	3	3	0	Not applicable
TRASH RECEPTACLES	3	3	0	Good condition
FOUNTAINS	8	8	0	Not applicable
MONUMENTS AND SIGNS				
CLEAR VISIBILITY (Landscaping)	25	25	0	Good condition
PAINTING	25	25	0	Good condition
CLEANLINESS	25	25	0	Good condition
GENERAL CONDITION	25	25	0	Good condition

MERITUS

MONTHLY MAINTENANCE INSPECTION GRADESHEET

Site: Mandolin (all areas)

Date: Tuesday, May 9, 2017

	MAXIMUM VALUE	CURRENT VALUE	CURRENT DEDUCTION	REASON FOR DEDUCTION
HIGH IMPACT LANDSCAPING				
ENTRANCE MONUMENT	40	40	0	Good condition
RECREATIONAL AREAS	30	30	0	Good condition
SUBDIVISION MONUMENTS	30	30	0	Good condition
HARDSCAPE ELEMENTS				
WALLS/FENCING	15	15	0	Good condition
SIDEWALKS	30	30	0	Overall Ok
SPECIALTY MONUMENTS	15	15	0	Overall Ok
STREETS	25	25	0	Overall Ok
PARKING LOTS	15	15	0	Not applicable
LIGHTING ELEMENTS				
STREET LIGHTING	33	33	0	OK
LANDSCAPE UP LIGHTING	22	22	0	OK
MONUMENT LIGHTING	30	30	0	OK
AMENITY CENTER LIGHTING	15	15	0	Not applicable
GATES				
ACCESS CONTROL PAD	25	25	0	Not applicable
OPERATING SYSTEM	25	25	0	Not applicable
GATE MOTORS	25	25	0	Not applicable
GATES	25	25	0	Not applicable
SCORE	700	656	44	94%

Manager's Signature: Brian Howell 5/9/2017

Supervisor's Signature:

MERITUS

MONTHLY LANDSCAPE MAINTENANCE INSPECTION GRADESHEET

Site: Highland Park

Date: Tuesday, May 9, 2017

	MAXIMUM VALUE	CURRENT VALUE	CURRENT DEDUCTION	REASON FOR DEDUCTION
LANDSCAPE MAINTENANCE				
TURF	5	4	-1	Good condition
TURF FERTILITY	10	9	-1	Overall ok
TURF EDGING	5	5	0	Good condition
WEED CONTROL - TURF AREAS	5	4	-1	Minimal
TURF INSECT/DISEASE CONTROL	10	10	0	None observed
PLANT FERTILITY	5	3	-2	Need to monitor
WEED CONTROL - BED AREAS	5	1	-4	Beds/Pavers carry over
PLANT INSECT/DISEASE CONTROL	5	4	-1	None observed
PRUNING	10	9	-1	Overall ok
CLEANLINESS	5	5	0	Good condition
MULCHING	5	5	0	Overall ok
WATER/IRRIGATION MGMT	8	8	0	Overall Ok
CARRYOVERS	5	3	-2	Weeds
SEASONAL COLOR/PERENNIAL MAINTENANCE				
VIGOR/APPEARANCE	7	7	2	Overall ok
INSECT/DISEASE CONTROL	7	7	0	
DEADHEADING/PRUNING	3	3	0	
SCORE	100	87	15	87%

Contractor Signature: Brian Howell 5/9//2017

Manager's Signature:

Supervisor's Signature:

MERITUS

MONTHLY MAINTENANCE INSPECTION GRADESHEET

Site: Highland Park

Date: Tuesday, May 9 , 2017

	MAXIMUM VALUE	CURRENT VALUE	CURRENT DEDUCTION	REASON FOR DEDUCTION
AQUATICS				
DEBRIS	25	23	0	Good condition
INVASIVE MATERIAL (FLOATING)	20	16	-4	Algae-Hydrilla duckweed
INVASIVE MATERIAL (SUBMERSED)	20	17	-3	Torpedo grass
FOUNTAINS/AERATORS	20	20	0	Good condition
DESIRABLE PLANTS	15	12	-3	Overall ok
AMENITIES				
CLUBHOUSE INTERIOR	4	4	0	Not applicable
CLUBHOUSE EXTERIOR	3	3	0	Not applicable
POOL WATER	10	10	0	Not applicable
POOL TILES	10	10	0	Not applicable
POOL LIGHTS	5	5	0	Not applicable
POOL FURNITURE/EQUIPMENT	8	8	0	Not applicable
FIRST AID/SAFETY ITEMS	10	10	0	Not applicable
SIGNAGE (rules, pool, playground)	5	5	0	Not applicable
PLAYGROUND EQUIPMENT	5	5	0	Good condition
RECREATIONAL FACILITIES	7	7	0	Not applicable
RESTROOMS	6	6	0	Good condition
HARDSCAPE	10	10	0	Not applicable
ACCESS & MONITORING SYSTEM	3	3	0	Not applicable
IT/PHONE SYSTEM	3	3	0	Not applicable
TRASH RECEPTACLES	3	3	0	Good condition
FOUNTAINS	8	8	0	Not applicable
MONUMENTS AND SIGNS				
CLEAR VISIBILITY (Landscaping)	25	25	0	Good condition
PAINTING	25	23	-2	Good condition
CLEANLINESS	25	23	-2	Good condition
GENERAL CONDITION	25	23	-2	Good condition

MERITUS

MONTHLY MAINTENANCE INSPECTION GRADESHEET

Site: Highland Park

Date: Tuesday, May 9 , 2017

	MAXIMUM VALUE	CURRENT VALUE	CURRENT DEDUCTION	REASON FOR DEDUCTION
HIGH IMPACT LANDSCAPING				
ENTRANCE MONUMENT	40	38	-2	Ok overall
RECREATIONAL AREAS	30	28	-2	Ok overall
SUBDIVISION MONUMENTS	30	28	-2	Ok overall
HARDSCAPE ELEMENTS				
WALLS/FENCING	15	15	0	Overall Ok
SIDEWALKS	30	29	-1	Overall Ok
SPECIALTY MONUMENTS	15	15	0	Overall Ok
STREETS	25	25	0	Overall Ok
PARKING LOTS	15	15	0	Not applicable
LIGHTING ELEMENTS				
STREET LIGHTING	33	33	0	Good condition
LANDSCAPE UP LIGHTING	22	22	0	Good condition
MONUMENT LIGHTING	30	30	0	Good condition
AMENITY CENTER LIGHTING	15	15	0	Not applicable
GATES				
ACCESS CONTROL PAD	25	25	0	Not applicable
OPERATING SYSTEM	25	25	0	Not applicable
GATE MOTORS	25	25	0	Not applicable
GATES	25	25	0	Not applicable
SCORE	700	649	-51	93%

Manager's Signature: Brian Howell 5/9/2017

Supervisor's Signature:

MERITUS

MONTHLY LANDSCAPE MAINTENANCE INSPECTION GRADESHEET

Site: Mandolin (Common Areas)

Date: Tuesday, May 9, 2017

	MAXIMUM VALUE	CURRENT VALUE	CURRENT DEDUCTION	REASON FOR DEDUCTION
LANDSCAPE MAINTENANCE				
TURF	5	4	-1	Overall ok
TURF FERTILITY	10	10	0	Good condition
TURF EDGING	5	5	0	Good condition
WEED CONTROL - TURF AREAS	5	4	-1	Minimal
TURF INSECT/DISEASE CONTROL	10	10	0	None observed
PLANT FERTILITY	5	5	0	Good condition
WEED CONTROL - BED AREAS	5	4	-1	Minor
PLANT INSECT/DISEASE CONTROL	5	4	-1	Possible mites
PRUNING	10	9	-1	Overall ok
CLEANLINESS	5	5	0	Good condition
MULCHING	5	5	0	Good condition
WATER/IRRIGATION MGMT	8	8	0	Overall ok
CARRYOVERS	5	4	-1	Detail
SEASONAL COLOR/PERENNIAL MAINTENANCE				
VIGOR/APPEARANCE	7	7	0	Overall ok
INSECT/DISEASE CONTROL	7	7	0	
DEADHEADING/PRUNING	3	3	0	
SCORE	100	94	-6	94%

Contractor Signature: Brian Howell 5/9/2017

Manager's Signature:

Supervisor's Signature:

MERITUS

MONTHLY LANDSCAPE MAINTENANCE INSPECTION GRADESHEET

Site: Mandolin Reserve

Date: Tuesday, May 9, 2017

	MAXIMUM VALUE	CURRENT VALUE	CURRENT DEDUCTION	REASON FOR DEDUCTION
LANDSCAPE MAINTENANCE				
TURF	5	4	-1	Good condition
TURF FERTILITY	10	10	0	Good condition
TURF EDGING	5	5	0	Good condition
WEED CONTROL - TURF AREAS	5	4	-1	Minimal
TURF INSECT/DISEASE CONTROL	10	10	0	None observed
PLANT FERTILITY	5	4	-1	Good condition
WEED CONTROL - BED AREAS	5	4	-1	Weeds
PLANT INSECT/DISEASE CONTROL	5	4	-1	Possible mites
PRUNING	10	9	-1	Detail
CLEANLINESS	5	5	0	Overall Ok
MULCHING	5	5	0	Good condition
WATER/IRRIGATION MGMT	8	8	0	Overall Ok
CARRYOVERS	5	4	-1	Detail
SEASONAL COLOR/PERENNIAL MAINTENANCE				
VIGOR/APPEARANCE	7	7	0	Overall ok
INSECT/DISEASE CONTROL	7	7	0	
DEADHEADING/PRUNING	3	3	0	
SCORE	100	93	-7	93%

Contractor Signature: Brian Howell 5/9/2017

Manager's Signature:

Supervisor's Signature:

YELLOWSTONE LANDSCAPE

Customer	Invoice
Highland / Mandolin	Follow up

Date	Time	Weather	Page / of
4-24-17	9:00	Wind 15 to 20 mph Clouds on and off	1 of 2

	Site 1	Site 2	Site 3	Site 4	Site 5	Site 6	Site 7	Site 8	Site 9	Site 10
Algae	✓		✓	✓	✓	✓	✓	✓	✓	✓
Grass & Brush		✓								
Submersed Aquatics										
Floating Weeds			✓							
Blue Dye										
Oxygen										
Wetland Weeds										
Spot Treatment										
Physical Removal	✓	✓	✓	✓			✓	✓	✓	
Other										
Days of Restriction	Ø	Ø	Ø	Ø	Ø	Ø	Ø	Ø	Ø	Ø

Trash & limbs

Comments

Water levels are down 6 to 8 ft small ponds will be dry by the end of May shallow water is good for the start of summer hydrilla treatments, May will be the start of full blown grass perimeter treatments. These perimeters are 4 ft they were 8 in to 10 in.

Follow Up Visit:	Not Required	May Require

Method	Clarity	Flow
Backpack	> 1'	None
ATV	1' - 2'	Slight
Boat	2' - 4'	Heavy

Fish and Wildlife Observations	Alligator	Coots	Herons	Turtles
	Anhinga	Cormorant	Ibis	Wood Stork
	Bass	Egrets	Osprey	Other
	Bream	Gallinule	Otter	N/A
	Catfish	Gambusia	Snakes	
Wetland Habitat Observations	Arrowhead	Cordgrass	Pickerelweed	
	Bacopa	Canna	Soft Rush	
	Blue Flag	Lily	Spikerush	
	Bulrush	Maidencane	Other	
	Chara	Naiad	N/A	

YELLOWSTONE LANDSCAPE

Customer	Invoice
Highland/Mandolin	

Date	Time	Weather	Page / of
4-24-17	9:00	Wind 15 to 20 mph Cloudy on and off.	1 / 1

	Site 11	Site 12	Site 13	Site 14	Site 15	Site 16	Site 17	Site 18	Site 19	Site
Algae	✓	✓	✓	✓	✓	✓		✓	✓	
Grass & Brush							✓			
Submersed Aquatics										
Floating Weeds			(✓	✓	✓)					
Blue Dye				lillies						
Oxygen										
Wetland Weeds										
Spot Treatment										
Physical Removal										
Other										
Days of Restriction	Ø	Ø	Ø	Ø	Ø	Ø	Ø	Ø	Ø	

Comments

(17) dry-grass work (18) looks great small algae bloom around Park Place area.
Normal treatments for Algae and hydrilla along with more trash removal wind is getting stronger.

Follow Up Visit:	Not Required	May Require
Method	Clarity	Flow
Backpack	> 1'	None
ATV	1' - 2'	Slight
Boat	2' - 4'	Heavy

Fish and Wildlife Observations				
	Alligator	Boots	Herons	Turtles
	Anhinga	Cormorant	Ibis	Wood Stork
	Bass	Egrets	Osprey	Other
	Bream	Gallinule	Otter	N/A
	Catfish	Gambusia	Snakes	

Wetland Habitat Observations			
	Arrowhead	Cordgrass	Pickerelweed
	Bacopa	Canna	Soft Rush
	Blue Flag	Lily	Spikerush
	Bulrush	Maidencane	Other
	Chara	Naiad	N/A

YELLOWSTONE LANDSCAPE

Customer	Invoice
Highland / Mandolin	110

Date	Time	Weather	Page / of
4/-10	10:00	warm 78° Clear calm	1 / 1

	Site 9	Site 10	Site 11	Site 12	Site 13	Site	Site	Site	Site	Site
Algae	✓	✓	✓	✓	✓					
Grass & Brush										
Submersed Aquatics	✓	✓	✓	✓	✓					
Floating Weeds	✓				✓					
Blue Dye										
Oxygen										
Wetland Weeds										
Spot Treatment										
Physical Removal										
Other										
Days of Restriction	Ø	Ø	Ø	Ø	Ø					

Comments

(Hydrilla & lillies) these treatments are part of 4 part treatments over 90 days. Tech has also started perimter treatments on 13# for exposed grasses & arrowhead

Follow Up Visit:	Not Required	May Require

Method	Clarity	Flow
Backpack	> 1'	None
ATV	1' - 2'	Slight
Boat	2' - 4'	Heavy

Fish and Wildlife Observations				
	Alligator	Coots	Herons	Turtles
	Anhinga	Cormorant	Ibis	Wood Stork
	Bass	Egrets	Osprey	Other
	Bream	Gallinule	Otter	N/A
	Catfish	Gambusia	Snakes	

Wetland Habitat Observations			
	Arrowhead	Cordgrass	Pickerelweed
	Bacopa	Canna	Soft Rush
	Blue Flag	Lily	Spikerush
	Bulrush	Maidencane	Other
	Chara	Naiad	N/A

Custom Report

Technician Name: administrator

Location: highlaand park

State/Province: Fl.

Address:

Postal Code/ZIP:

City: Tampa

Report Period: 4/1/2017 to 4/15/2017

		Total Vehicle Count	*Posted Speed Limit*	*Tolerated Speed*	*Number of Speed Limit Violations*	*Number of Vehicles Respecting Limit*	*Number of Vehicles inside Tolerated Range*
4/1/2017	**00:00:00**	689	15	20	347	342	247
4/2/2017	**00:00:00**	918	15	20	530	388	390
4/3/2017	**00:00:00**	949	15	20	488	461	372
4/4/2017	**00:00:00**	973	15	20	547	426	420
4/5/2017	**00:00:00**	1,035	15	20	H 566	469	H 438
4/6/2017	**00:00:00**	968	15	20	517	451	400
4/7/2017	**00:00:00**	876	15	20	485	391	346
4/8/2017	**00:00:00**	706	15	20	398	308	292
4/9/2017	**00:00:00**	954	15	20	520	434	375
4/10/2017	**00:00:00**	932	15	20	477	455	367
4/11/2017	**00:00:00**	942	15	20	445	497	353
4/12/2017	**00:00:00**	H 1,037	15	20	517	520	399
4/13/2017	**00:00:00**	956	15	20	448	508	363
4/14/2017	**00:00:00**	903	15	20	366	H 537	295
		SUM: 12,838			**SUM: 6,651**	**SUM: 6,187**	**SUM: 5,057**

		% of Speed Limit Violations	% of Vehicles Respecting Limit	% Vehicles in Tolerated Range	Average Vehicle Speed	Maximum Speed	Minimum Speed
4/1/2017	**00:00:00**	50	50	36	14	28	5
4/2/2017	**00:00:00**	H 58	42	42	H 15	34	5
4/3/2017	**00:00:00**	51	49	39	14	38	5
4/4/2017	**00:00:00**	56	44	H 43	H 15	33	5
4/5/2017	**00:00:00**	55	45	42	H 15	34	5
4/6/2017	**00:00:00**	53	47	41	14	68	5
4/7/2017	**00:00:00**	55	45	39	H 15	37	5
4/8/2017	**00:00:00**	56	44	41	H 15	31	5
4/9/2017	**00:00:00**	55	45	39	H 15	69	5
4/10/2017	**00:00:00**	51	49	39	14	32	5
4/11/2017	**00:00:00**	47	53	37	14	32	5
4/12/2017	**00:00:00**	50	50	38	14	72	5
4/13/2017	**00:00:00**	47	53	38	14	39	5
4/14/2017	**00:00:00**	41	H 59	33	14	44	5
		AVG: 51	**AVG: 48**	**AVG: 39**	**AVG: 14**		

		50% Speeds	*85% Speeds*
4/1/2017	**00:00:00**	14	21
4/2/2017	**00:00:00**	15	22
4/3/2017	**00:00:00**	15	20
4/4/2017	**00:00:00**	15	22
4/5/2017	**00:00:00**	15	20
4/6/2017	**00:00:00**	15	20
4/7/2017	**00:00:00**	15	22
4/8/2017	**00:00:00**	15	22
4/9/2017	**00:00:00**	15	22
4/10/2017	**00:00:00**	15	20
4/11/2017	**00:00:00**	14	20
4/12/2017	**00:00:00**	15	20
4/13/2017	**00:00:00**	14	19
4/14/2017	**00:00:00**	14	19
		AVG: 14	**AVG: 20**

Custom Report

Technician Name: administrator

Location: Highland Park

State/Province:

Address:

Postal Code/ZIP:

City:

Report Period: 4/16/2017 to 4/30/2017

		Total Vehicle Count	*Posted Speed Limit*	*Tolerated Speed*	*Number of Speed Limit Violations*	*Number of Vehicles Respecting Limit*	*Number of Vehicles inside Tolerated Range*
4/16/2017	**00:00:00**	483	15	20	249	234	186
4/17/2017	**00:00:00**	1,026	15	20	509	H 517	398
4/18/2017	**00:00:00**	962	15	20	526	436	410
4/19/2017	**00:00:00**	977	15	20	518	459	396
4/20/2017	**00:00:00**	H 1,106	15	20	H 602	504	H 440
4/21/2017	**00:00:00**	955	15	20	500	455	357
4/22/2017	**00:00:00**	749	15	20	412	337	282
4/23/2017	**00:00:00**	952	15	20	497	455	359
4/24/2017	**00:00:00**	986	15	20	481	505	368
4/25/2017	**00:00:00**	948	15	20	494	454	374
4/26/2017	**00:00:00**	1,046	15	20	569	477	415
4/27/2017	**00:00:00**	1,021	15	20	554	467	392
4/28/2017	**00:00:00**	837	15	20	450	387	321
4/29/2017	**00:00:00**	651	15	20	360	291	244
		SUM: 12,699			**SUM: 6,721**	**SUM: 5,978**	**SUM: 4,942**

		% of Speed Limit Violations	% of Vehicles Respecting Limit	% Vehicles in Tolerated Range	Average Vehicle Speed	Maximum Speed	Minimum Speed
4/16/2017	**00:00:00**	52	48	39	14	27	5
4/17/2017	**00:00:00**	50	50	39	14	42	5
4/18/2017	**00:00:00**	H 55	45	H 43	14	29	5
4/19/2017	**00:00:00**	53	47	41	H 15	34	5
4/20/2017	**00:00:00**	54	46	40	H 15	39	5
4/21/2017	**00:00:00**	52	48	37	H 15	31	5
4/22/2017	**00:00:00**	H 55	45	38	H 15	29	5
4/23/2017	**00:00:00**	52	48	38	H 15	31	5
4/24/2017	**00:00:00**	49	H 51	37	14	39	5
4/25/2017	**00:00:00**	52	48	39	H 15	36	5
4/26/2017	**00:00:00**	54	46	40	H 15	35	5
4/27/2017	**00:00:00**	54	46	38	H 15	80	5
4/28/2017	**00:00:00**	54	46	38	H 15	45	5
4/29/2017	**00:00:00**	H 55	45	37	H 15	30	5
		AVG: 52	**AVG: 47**	**AVG: 38**	**AVG: 14**		

		50% Speeds	*85% Speeds*
4/16/2017	**00:00:00**	15	21
4/17/2017	**00:00:00**	15	20
4/18/2017	**00:00:00**	15	20
4/19/2017	**00:00:00**	15	20
4/20/2017	**00:00:00**	15	21
4/21/2017	**00:00:00**	15	22
4/22/2017	**00:00:00**	15	22
4/23/2017	**00:00:00**	15	22
4/24/2017	**00:00:00**	14	20
4/25/2017	**00:00:00**	15	21
4/26/2017	**00:00:00**	15	22
4/27/2017	**00:00:00**	15	22
4/28/2017	**00:00:00**	15	22
4/29/2017	**00:00:00**	15	23
		AVG: 14	**AVG: 21**

Spearem Enterprises, LLC
8348 Little Rd. Ste. 201
New Port Richey 34654
(727) 237-2316
spearem.jmb@gmail.com

Estimate 1346

ADDRESS
Park Place CDD
Meritus
2005 Pan Am Circle, Suite 120
Tampa , FL 33607

DATE	TOTAL
04/05/2017	$6,600.00

ACTIVITY	QTY	RATE	AMOUNT
Material Highland Park Playground: Classic Series, 6' Table 2x4 Ipe Slats, Mount Powder Coat (Color to remain the same as exisiting tables in park) Classic Series, 6' Backless Bench (2), IPE Slats, Surface Mount, Powder Coated Cost includes Material & Freight	1	6,400.00	6,400.00
Labor Assembly & Installation of table and backless benches. Please be advised Material Deposit Required in the amount of $6400.00. Please note "lead time" is 8-10 weeks because product is made to order.	1	200.00	200.00

It is anticipated that permits will not be required for the above work, and if required, the associated costs will be added to the price stated below. Any existing conditions that are not reasonably discoverable prior to the job start date, which in anyway interferes with the safe and satisfactory completion of this job, will be corrected by an additional work order and estimate for approval prior to resuming job. Spearem Enterprises, LLC is not responsible for any delays in performance of service that are due in full or in part to circumstances beyond our control. Spearem Enterprises, LLC is not responsible for damage, personal or property damage by others at the job site.
Whether actual or consequential, or any claim arising out of or relating to "Acts of God".
Job will Commence within 30 days of receiving signed, approved proposal-weather permitting.

TOTAL $6,600.00

THANK YOU.

Accepted By

Accepted Date

Victor Stanley, Inc.

P.O. DRAWER 330 - DUNKIRK, MD 20754 USA
TEL (301) 855-8300 - FAX (410) 257-7579

PRODUCT SPECIFICATIONS

CADD Department	VIEWS 6
DRAWN R.D.N.	REV. 1/19/99

CLASSIC SERIES

C-9

Standard 6 Foot Length

For your convenience and economy this table is shipped partially unassembled

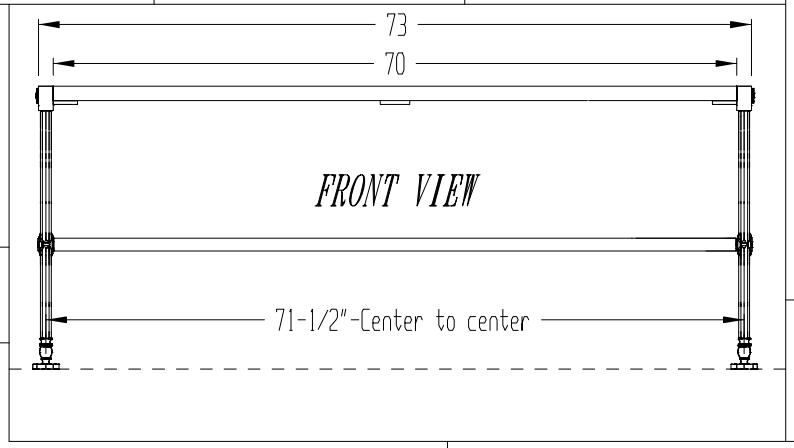

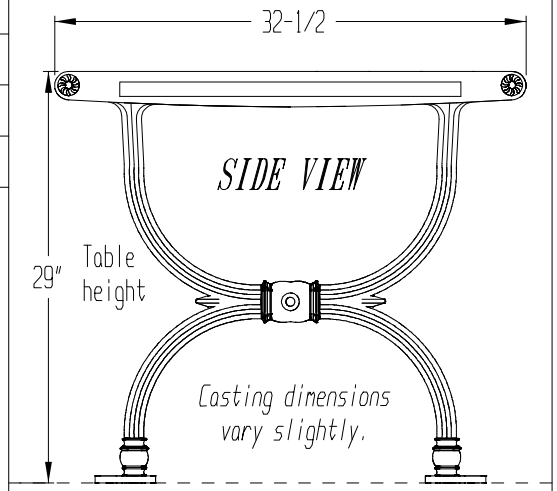

It is not recommended to locate anchor bolts until table is in place.

All fabricated components are steel shot-blasted, etched, phosphatized and electrostatically powder-coated with TGIC polyester powder coatings.

The C-9 braces are pre-drilled with the appropriate hole pattern to mount the (9) 2" x 4" (nominal) woodslats

All specifications are subject to change. Please contact factory for details.

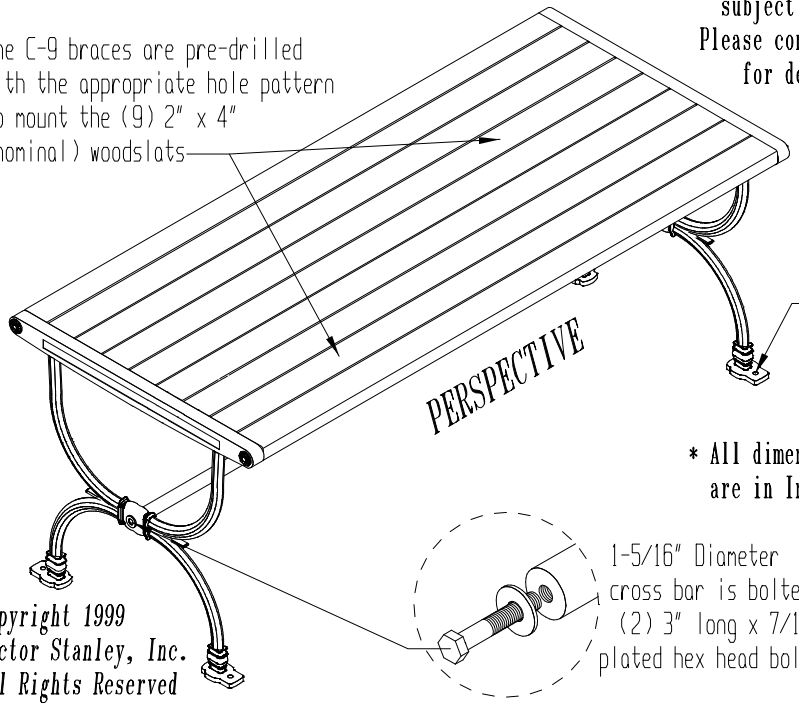

*** All dimensions are in Inches ***

Copyright 1999
Victor Stanley, Inc.
All Rights Reserved

Ductile Iron castings come with a 10 year warranty against breakage

(Anchor bolts provided by others)

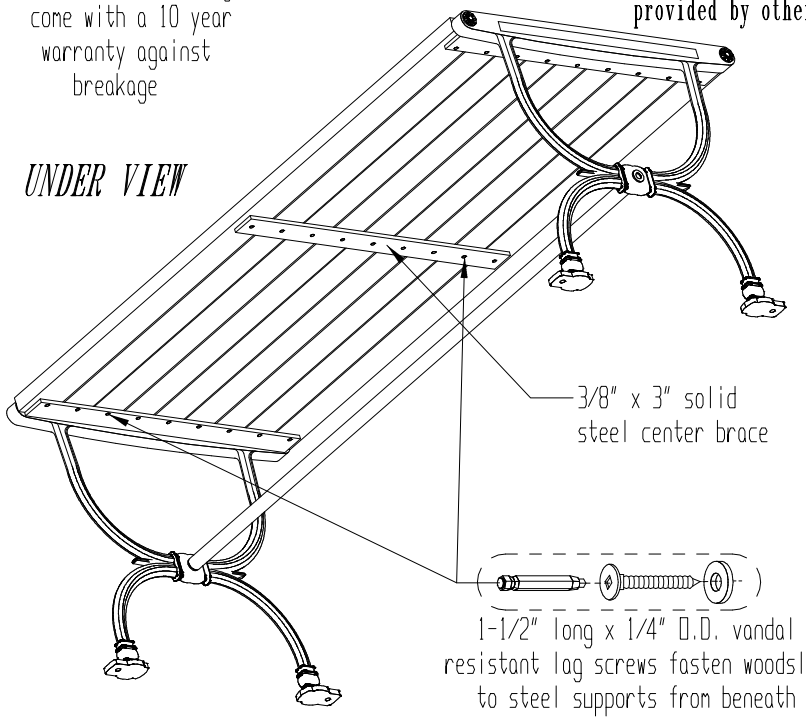

VICTOR STANLEY, INC.
-Manufacturers of Quality Site Furnishings since 1962-

P.O. DRAWER 330 - DUNKIRK, MD 20754 USA
TOLL FREE: (800) 368-2573 (USA & CANADA)
TEL (301) 855-8300 - FAX (410) 257-7579
WEB SITE: HTTP://WWW.VICTORSTANLEY.COM

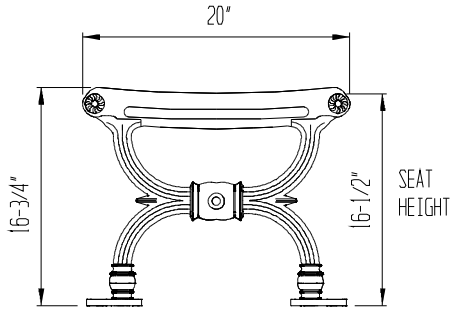

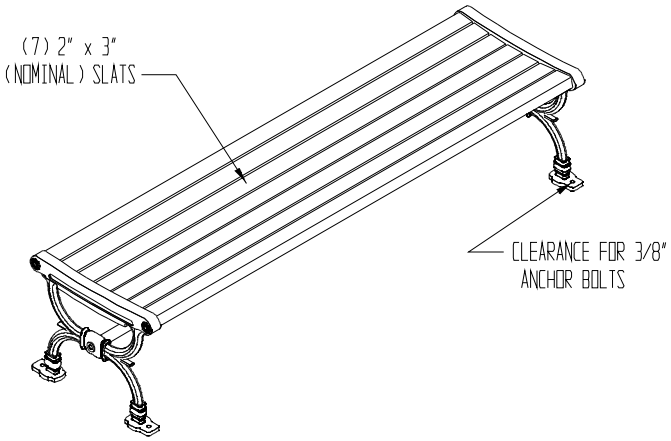

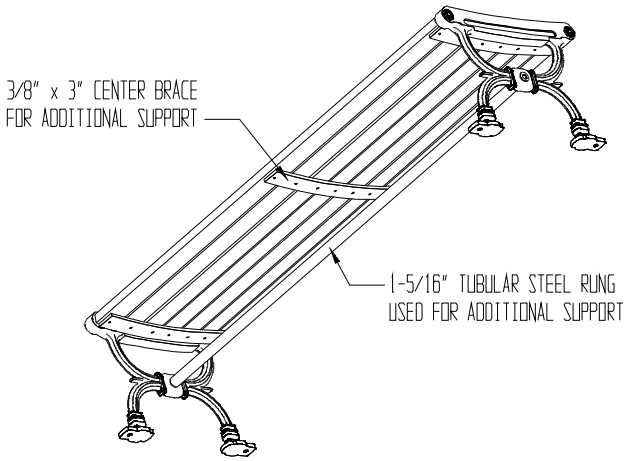

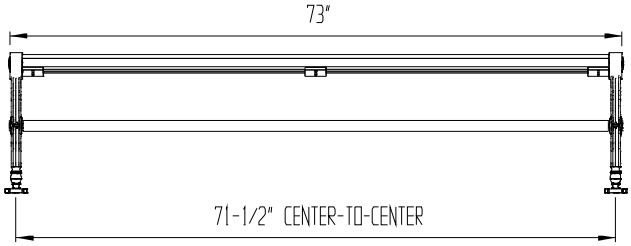

CENTER-TO-CENTER DISTANCES ARE APPROXIMATE
(VARIATIONS IN CASTINGS ARISE FROM DIFFERENT RATES OF COOLING)

AVAILABLE OPTIONS:

POWDER COATING
- 10 STANDARD COLORS, CUSTOM COLORS (INCLUDING THE RAL RANGE)

SLAT TYPES
- WOODS: PHILIPPINE MAHOGANY AND IPE
- 2nd SITE SYSTEMS® REINFORCED RECYCLED PLASTIC SLATS
  - COLORS: GRAY, MAPLE, CHERRY, AND WALNUT

ARMRESTS
- 4', 6', & 8' AVAILABLE WITH OPTIONAL ARMRESTS

LENGTHS
- STANDARD 4'
- STANDARD 6' LENGTH SHOWN
- STANDARD 8'

NOTES:
1. DUCTILE IRON CASTINGS COME WITH A TEN YEAR WARRANTY AGAINST BREAKAGE.
2. DRAWING NOT TO SCALE. DO NOT SCALE DRAWINGS.
3. ALL FABRICATED METAL COMPONENTS ARE STEEL SHOTBLASTED, ETCHED, PHOSPHATIZED, PREHEATED, AND ELECTROSTATICALLY POWDER-COATED WITH T.G.I.C. POLYESTER POWDER COATINGS. PRODUCTS ARE FULLY CLEANED AND PRETREATED, PREHEATED AND COATED WHILE HOT TO FILL CREVICES AND BUILD COATING FILM. COATED PARTS ARE THEN FULLY CURED TO COATING MANUFACTURER'S SPECIFICATIONS. THE THICKNESS OF THE RESULTING FINISH COAT AVERAGES 8-10 MILS (200-250 MICRONS).
4. IT IS NOT RECOMMENDED TO LOCATE ANCHOR BOLTS UNTIL BENCH IS IN PLACE. THIS VICTOR STANLEY, INC. PRODUCT MUST BE PERMANENTLY AFFIXED TO THE GROUND. CONSULT YOUR LOCAL CODES FOR REGULATIONS.
5. ANCHOR BOLTS PROVIDED BY OTHERS.
6. FOR HIGH SALT ABUSIVE CLIMATES, HOT DIP GALVANIZING BEFORE POWDER COATING IS AVAILABLE. SEE WRITTEN SPECIFICATIONS FOR DETAILS.
7. ALL SPECIFICATIONS ARE SUBJECT TO CHANGE. CONTACT MANUFACTURER FOR DETAILS.
8. THIS PRODUCT IS SHIPPED PARTIALLY UNASSEMBLED.

C-5

CLASSIC SERIES STANDARD BACKLESS BENCH WITH DUCTILE IRON END FRAMES
SHOWN: STANDARD 6-FOOT LENGTH

COPYRIGHT 2003 VICTOR STANLEY, INC. ALL RIGHTS RESERVED

REV. 8/28/03 DRAWN C.D.B.

Spearem Enterprises, LLC
8348 Little Rd. Ste. 201
New Port Richey 34654
(727) 237-2316
spearem.jmb@gmail.com

Estimate 1354

ADDRESS
Park Place CDD
Meritus
5680 W. Cypress Street,
Suite A
Tampa , FL 33607

DATE	TOTAL
04/10/2017	$2,400.00

ACTIVITY	QTY	RATE	AMOUNT
Labor Highland Park Southern Boardwalk Top Hand Rail Replacment and Damaged/Rotted Deck Board Replacment Remove , dispose and replace approximatley 240 ft of Top Hand Rail 2x6x16 and deckboards 2x6x8, approximatley 64 ft. Price includes removal, disposal and installation of new wood, fastners and labor.	1	2,400.00	2,400.00

It is anticipated that permits will not be required for the above work, and if required, the associated costs will be added to the price stated below. Any existing conditions that are not reasonably discoverable prior to the job start date, which in anyway interferes with the safe and satisfactory completion of this job, will be corrected by an additional work order and estimate for approval prior to resuming job. Spearem Enterprises, LLC is not responsible for any delays in performance of service that are due in full or in part to circumstances beyond our control. Spearem Enterprises, LLC is not responsible for damage, personal or property damage by others at the job site.
Whether actual or consequential, or any claim arising out of or relating to "Acts of God".
Job will Commence within 30 days of receiving signed, approved proposal-weather permitting.

TOTAL $2,400.00

THANK YOU.

Accepted By

Accepted Date

Spearem Enterprises, LLC
8348 Little Rd. Ste. 201
New Port Richey 34654
(727) 237-2316
spearem.jmb@gmail.com

Estimate 1353

ADDRESS
Park Place CDD
Meritus
2005 Pan Am Circle, Suite
120
Tampa , FL 33607

DATE	TOTAL
04/10/2017	$12,900.00

ACTIVITY	QTY	RATE	AMOUNT
Labor Highland Park Northern Boardwalk Top hand rail replacement and damaged/rotted deck board replacement Remove , Dispose and Replace approximatley 1200 ft of top hand rail 2 x6 and approximate 1600ft of 2x6x8 deck boards-Approximatley 200 boards. Price includes removal, disposal and installation of new wood, fastners and labor.	1	12,900.00	12,900.00

Any existing
conditions that are not reasonably discoverable prior to the job start date, which in anyway interferes with the safe and satisfactory completion of this job, will be corrected by an additional work order and estimate for approval prior to resuming job. Spearem Enterprises, LLC is not responsible for any delays in performance of service that are due in full or in part to circumstances beyond our control. Spearem Enterprises, LLC is not responsible for damage, personal or property damage by others at the job site.
Whether actual or consequential, or any claim
arising out of or relating to "Acts of God".
Job will Commence within 30 days of receiving signed, approved proposal-weather permitting.

TOTAL $12,900.00

THANK YOU.

Accepted By

Accepted Date

RESOLUTION 2017- 02

A RESOLUTION OF THE BOARD OF SUPERVISORS OF THE PARK PLACE COMMUNITY DEVELOPMENT DISTRICT APPROVING PROPOSED BUDGET(S) FOR FISCAL YEAR 2017/2018 AND SETTING A PUBLIC HEARING THEREON PURSUANT TO FLORIDA LAW; ADDRESSING TRANSMITTAL, POSTING AND PUBLICATION REQUIREMENTS; AND PROVIDING AN EFFECTIVE DATE.

WHEREAS, the District Manager has heretofore prepared and submitted to the Board of Supervisors ("**Board**") of the Park Place Community Development District (**"District"**) prior to June 15, 2017, proposed budget(s) (**"Proposed Budget"**) for the fiscal year beginning October 1, 2017 and ending September 30, 2018 (**"Fiscal Year 2017/2018"**); and

WHEREAS, the Board has considered the Proposed Budget and desires to set the required public hearing thereon.

NOW, THEREFORE, BE IT RESOLVED BY THE BOARD OF SUPERVISORS OF THE PARK PLACE COMMUNITY DEVELOPMENT DISTRICT:

1. **PROPOSED BUDGET APPROVED.** The Proposed Budget prepared by the District Manager for Fiscal Year 2017/2018 attached hereto as **Exhibit A** is hereby approved as the basis for conducting a public hearing to adopt said Proposed Budget.

2. **SETTING A PUBLIC HEARING.** A public hearing on said approved Proposed Budget is hereby declared and set for the following date, hour and location:

DATE:	August 16, 2017
HOUR:	4:00 p.m.
LOCATION:	The Lake House 11740 Casa Lago Lane Tampa, FL 33626

3. **TRANSMITTAL OF PROPOSED BUDGET TO LOCAL GENERAL PURPOSE GOVERNMENT.** The District Manager is hereby directed to submit a copy of the Proposed Budget to Hillsborough County at least 60 days prior to the hearing set above.

4. **POSTING OF PROPOSED BUDGET.** In accordance with Section 189.016, *Florida Statutes*, the District's Secretary is further directed to post the approved Proposed Budget on the District's website at least two days before the budget hearing date as set forth in Section 2, and shall remain on the website for at least 45 days.

5. **PUBLICATION OF NOTICE.** Notice of this public hearing shall be published in the manner prescribed in Florida law.

6. **EFFECTIVE DATE.** This Resolution shall take effect immediately upon adoption.

PASSED AND ADOPTED THIS 17th DAY OF MAY, 2017.

ATTEST:

PARK PLACE COMMUNITY DEVELOPMENT DISTRICT

_____
Secretary

By:_____
Its:_____

2018

PARK PLACE
COMMUNITY DEVELOPMENT DISTRICT

FISCAL YEAR 2018
PROPOSED ANNUAL OPERATING BUDGET

MAY 17, 2017

PARK PLACE
COMMUNITY DEVELOPMENT DISTRICT

FISCAL YEAR 2018
PROPOSED ANNUAL OPERATING BUDGET

TABLE OF CONTENTS

SECTION	DESCRIPTION	PAGE
I.	BUDGET INTRODUCTION	1
II.	GENERAL FUND 100 - FISCAL YEAR 2017 BUDGET ANALYSIS	2
III.	GENERAL FUND 100 - PROPOSED OPERATING BUDGET	3
IV.	GENERAL FUND 100 DESCRIPTIONS	4
V.	GENERAL FUND 101 - FISCAL YEAR 2017 BUDGET ANALYSIS	6
VI.	GENERAL FUND 101 - PROPOSED OPERATING BUDGET	7
VII.	GENERAL FUND 101 DESCRIPTIONS	8
VIII.	GENERAL FUND 102 - FISCAL YEAR 2017 BUDGET ANALYSIS	9
IX.	GENERAL FUND 102 - PROPOSED OPERATING BUDGET	10
X.	GENERAL FUND 102 DESCRIPTIONS	11
XI.	GENERAL FUND 103 - FISCAL YEAR 2017 BUDGET ANALYSIS	13
XII.	GENERAL FUND 103 - PROPOSED OPERATING BUDGET	14
XIII.	GENERAL FUND 103 DESCRIPTIONS	15
XIV.	DEBT SERVICE FUNDS	17
XV.	SCHEDULE OF ANNUAL ASSESSMENTS	19

MAY 17, 2017

PARK PLACE
COMMUNITY DEVELOPMENT DISTRICT

BUDGET INTRODUCTION

Background Information

The Park Place Community Development District is a local special purpose government authorized by Chapter 190, Florida Statutes, as amended. The Community Development District (CDD) is an alternative method for planning, financing, acquiring, operating and maintaining community-wide infrastructure in master planned communities. The CDD also is a mechanism that provides a "solution" to the State's needs for delivery of capital infrastructure to service projected growth without overburdening other governments and their taxpayers. CDDs represent a major advancement in Florida's effort to manage its growth effectively and efficiently. This allows the community to set a higher standard for construction along with providing a long-term solution to the operation and maintenance of community facilities.

The following report represents the District budget for Fiscal Year 2018, which begins on October 1, 2017. The District budget is organized by fund to segregate financial resources and ensure that the segregated resources are used for their intended purpose, and the District has established the following funds.

Fund Number	Fund Name	Services Provided
001	General Fund	Operations and Maintenance of Community Facilities Financed by Non-Ad Valorem Assessments
200	Debt Service Fund	Collection of Special Assessments for Debt Service on the Series 2014 Capital Improvement Revenue Bonds
201	Debt Service Fund	Collection of Special Assessments for Debt Service on the Series 2008 Capital Improvement Revenue Bonds

Facilities of the District

The District's existing facilities include storm-water management (lake and water control structures), wetland preserve areas, street lighting, landscaping, entry signage, entry features, irrigation distribution facilities, recreational center, parks, pool facility, tennis courts and other related public improvements.

Maintenance of the Facilities

In order to maintain the facilities, the District conducts hearings to adopt an operating budget each year. This budget includes a detailed description of the maintenance program along with an estimate of the cost of the program. The funding of the maintenance budget is levied as a non-ad valorem assessment on your property by the District Board of Supervisors.

PARK PLACE
COMMUNITY DEVELOPMENT DISTRICT

GENERAL FUND 100 ADMINISTRATION

	Fiscal Year 2017 Operating Budget	Current Period Actuals 10/1/2016 - 3/31/2017	Projected Revenues & Expenditures 4/1/17 to 9/30/17	Total Actuals and Projections Through 09/30/17	Over/(Under) Budget Through 09/30/17
REVENUES					
SPECIAL ASSESSMENTS					
O&M Assessments-Tax Roll	130,644.09	127,648.44	5,765.30	133,413.74	2,769.65
TOTAL SPECIAL ASSESSMENTS	**130,644.09**	**127,648.44**	**5,765.30**	**133,413.74**	**2,769.65**
INTEREST EARNINGS					
Interest Earnings	0.00	101.23	0.00	101.23	101.23
TOTAL INTEREST EARNINGS	**0.00**	**101.23**	**0.00**	**101.23**	**101.23**
OTHER MISCELLANEOUS REVENUES					
Undesignated Reserves	6,840.91	0.00	0.00	0.00	(6,840.91)
TOTAL OTHER MISCELLANEOUS REVENUES	**6,840.91**	**0.00**	**0.00**	**0.00**	**(6,840.91)**
TOTAL REVENUES	**$137,485.00**	**$127,749.67**	**$5,765.30**	**$133,514.97**	**($3,970.03)**
EXPENDITURES					
LEGISLATIVE					
Supervisor Fees	12,000.00	4,000.00	4,600.00	8,600.00	(3,400.00)
TOTAL LEGISLATIVE	**12,000.00**	**4,000.00**	**4,600.00**	**8,600.00**	**(3,400.00)**
FINANCIAL & ADMINISTRATIVE					
Management Services	52,000.00	26,000.04	25,999.96	52,000.00	0.00
District Engineer	8,000.00	4,585.50	3,414.50	8,000.00	0.00
Disclosure Report	2,000.00	0.00	2,000.00	2,000.00	0.00
Trustees Fees	7,250.00	4,746.67	3,085.62	7,832.29	582.29
Auditing Services	7,000.00	0.00	4,600.00	4,600.00	(2,400.00)
Arbitrage Rebate Calculation	650.00	0.00	650.00	650.00	0.00
Financial Services	31,000.00	15,500.04	15,499.96	31,000.00	0.00
Postage and Resident Notices	750.00	57.15	692.85	750.00	0.00
Resident Newsletter	860.00	0.00	860.00	860.00	0.00
Electric Utility Services	0.00	(113.75)	0.00	(113.75)	(113.75)
Professional Liability Insurance	1,800.00	1,805.00	899.53	2,704.53	904.53
Legal Advertising	600.00	941.00	236.37	1,177.37	577.37
Bank Fees	400.00	133.88	266.12	400.00	0.00
Dues, Licenses & Fees	175.00	175.00	0.00	175.00	0.00
Office Supplies	500.00	97.57	0.00	97.57	(402.43)
Website Development & Maintenance	1,000.00	0.00	210.45	210.45	(789.55)
Capital Improvements	2,000.00	0.00	0.00	0.00	(2,000.00)
TOTAL FINANCIAL & ADMINISTRATIVE	**115,985.00**	**53,928.10**	**58,415.36**	**112,343.46**	**(3,641.54)**
LEGAL COUNSEL					
District Counsel	9,000.00	3,862.23	3,923.28	7,785.51	(1,214.49)
TOTAL LEGAL COUNSEL	**9,000.00**	**3,862.23**	**3,923.28**	**7,785.51**	**(1,214.49)**
OTHER PHYSICAL ENVIRONMENT					
District Permit Compliance	500.00	0.00	0.00	0.00	(500.00)
Sidewalk Maintenance	0.00	1,700.00	1,700.00	3,400.00	3,400.00
TOTAL OTHER PHYSICAL ENVIRONMENT	**500.00**	**1,700.00**	**1,700.00**	**3,400.00**	**2,900.00**
PARKS & RECREATION					
Security Patrol	0.00	0.00	1,386.00	1,386.00	1,386.00
TOTAL PARKS & RECREATION	**0.00**	**0.00**	**1,386.00**	**1,386.00**	**1,386.00**
TOTAL EXPENDITURES	**$137,485.00**	**$63,490.33**	**$70,024.64**	**$133,514.97**	**($3,970.03)**
EXCESS OF REVENUES OVER (UNDER) EXPENDITURES	**$0.00**	**$64,259.34**	**($64,259.34)**	**$0.00**	**($0.00)**

FISCAL YEAR 2017 BUDGET ANALYSIS

PARK PLACE
COMMUNITY DEVELOPMENT DISTRICT

GENERAL FUND 100 ADMINISTRATION	Fiscal Year 2017 Operating Budget	Total Actuals and Projections Through 09/30/17	Over/(Under) Budget Through 09/30/17	Fiscal Year 2018 Proposed Operating Budget	Increase / (Decrease) from FY 2017 to FY 2018
REVENUES					
SPECIAL ASSESSMENTS					
O&M Assessments-Tax Roll	130,644.09	133,413.74	2,769.65	130,644.09	0.00
TOTAL SPECIAL ASSESSMENTS	**130,644.09**	**133,413.74**	**2,769.65**	**130,644.09**	**0.00**
INTEREST EARNINGS					
Interest Earnings	0.00	101.23	101.23	0.00	0.00
TOTAL INTEREST EARNINGS	**0.00**	**101.23**	**101.23**	**0.00**	**0.00**
OTHER MISCELLANEOUS REVENUES					
Undesignated Reserves	6,840.91	0.00	(6,840.91)	3,040.91	(3,800.00)
TOTAL OTHER MISCELLANEOUS REVENUES	**6,840.91**	**0.00**	**(6,840.91)**	**3,040.91**	**(3,800.00)**
TOTAL REVENUES	**$137,485.00**	**$133,514.97**	**($3,970.03)**	**$133,685.00**	**($3,800.00)**
EXPENDITURES					
LEGISLATIVE					
Supervisor Fees	12,000.00	8,600.00	(3,400.00)	12,000.00	0.00
TOTAL LEGISLATIVE	**12,000.00**	**8,600.00**	**(3,400.00)**	**12,000.00**	**0.00**
FINANCIAL & ADMINISTRATIVE					
Management Services	52,000.00	52,000.00	0.00	52,000.00	0.00
District Engineer	8,000.00	8,000.00	0.00	8,000.00	0.00
Disclosure Report	2,000.00	2,000.00	0.00	2,000.00	0.00
Trustees Fees	7,250.00	7,832.29	582.29	7,250.00	0.00
Auditing Services	7,000.00	4,600.00	(2,400.00)	5,000.00	(2,000.00)
Arbitrage Rebate Calculation	650.00	650.00	0.00	650.00	0.00
Financial Services	31,000.00	31,000.00	0.00	31,000.00	0.00
Postage and Resident Notices	750.00	750.00	0.00	750.00	0.00
Resident Newsletter	860.00	860.00	0.00	860.00	0.00
Electric Utility Services	0.00	(113.75)	(113.75)	0.00	0.00
Professional Liability Insurance	1,800.00	2,704.53	904.53	1,800.00	0.00
Legal Advertising	600.00	1,177.37	577.37	600.00	0.00
Bank Fees	400.00	400.00	0.00	400.00	0.00
Dues, Licenses & Fees	175.00	175.00	0.00	175.00	0.00
Office Supplies	500.00	97.57	(402.43)	500.00	0.00
Website Development & Maintenance	1,000.00	210.45	(789.55)	200.00	(800.00)
Capital Improvements	2,000.00	0.00	(2,000.00)	0.00	(2,000.00)
TOTAL FINANCIAL & ADMINISTRATIVE	**115,985.00**	**112,343.46**	**(3,641.54)**	**111,185.00**	**(4,800.00)**
LEGAL COUNSEL					
District Counsel	9,000.00	7,785.51	(1,214.49)	8,000.00	(1,000.00)
TOTAL LEGAL COUNSEL	**9,000.00**	**7,785.51**	**(1,214.49)**	**8,000.00**	**(1,000.00)**
OTHER PHYSICAL ENVIRONMENT					
District Permit Compliance	500.00	0.00	(500.00)	500.00	0.00
Sidewalk Maintenance	0.00	3,400.00	3,400.00	0.00	0.00
TOTAL OTHER PHYSICAL ENVIRONMENT	**500.00**	**3,400.00**	**2,900.00**	**500.00**	**0.00**
PARKS & RECREATION					
Security Patrol	0.00	1,386.00	1,386.00	2,000.00	2,000.00
TOTAL PARKS & RECREATION	**0.00**	**1,386.00**	**1,386.00**	**2,000.00**	**2,000.00**
TOTAL EXPENDITURES	**$137,485.00**	**$133,514.97**	**($3,970.03)**	**$133,685.00**	**($3,800.00)**
EXCESS OF REVENUES OVER (UNDER) EXPENDITURES	**$0.00**	**$0.00**	**($0.00)**	**$0.00**	**$0.00**

GENERAL FUND 100

Financial & Administrative

Management Services

The services encompassed in this category include District Management, Recording Secretary, Field Administration, and Rentals and Leases. Management Services provide for daily administration of District business. In addition, the District Manager prepares the Annual Budget(s), implements all policies of the Board of Supervisors, and attends all meetings of the Board of Supervisors. Recording Secretary services provide for preparation and recording the minutes of the official district records of proceeding. Field Administrative Services provide for assisting the general public with day-to-day service calls, questions, and comments that are considered part of the District's obligation in providing responsive and quality customer services to the general public. Technology Services provide for; 1. Maintaining operating components and systems in compliance with

District Engineer

Consists of attendance at scheduled meetings of the Board of Supervisors, offering advice and consultation on all matters related to the works of the District, such as bids for yearly contracts, operating policy, compliance with

Disclosure Report

This is required of the District as part of the bond indentures.

Trustee Fees

This is required of the District as part of the bond indentures.

Auditing Services

The District is required to annually undertake an independent examination of its books, records and accounting procedures. This audit is conducted pursuant to State Law and the Rules of the Auditor General.

Arbitrage Rebate Calculation

This is required of the District as part of the bond indentures.

Financial Services

As part of the management contract, the District retains Financial and Accounting Services to oversee and manage cash inflows and outflows, record the District's financial transactions in compliance with governmental accounting standards, prepare the annual tax roll for the County, provide financial statements and schedules, coordinate the annual independent audit, prepare and submit necessary IRS forms and documentation, prepare

Postage, Phone, Faxes, Copies

Cost of materials and service to produce agendas and conduct day-to-day business of the District.

Professional Liability Insurance

The District carries Public Officials Liability in the amount of $1,000,000.

Legal Advertising

This is required to conduct the official business of the District in accordance with the Sunshine Law and other advertisement requirements as indicated by the Florida Statutes.

Bank Fees

The District operates a checking account for expenditures and receipts.

Dues, Licenses & Fees

The District is required to file with the County and State each year

Miscellaneous Fees

This is to aid in unforeseen issues.

GENERAL FUND 100

Office Supplies

Cost of daily supplies required by the District to facilitate operations.

Website Development & Maintenance

This is for maintenance and administration of the Districts official website.

Capital Outlay

This is to fund new items as required.

Legal Counsel

District Counsel

Requirements for legal services are estimated annual expenditures on an as needed basis and also cover such items as attendance at scheduled meetings of the Board of Supervisor's, contract preparation and review, etc.

Operating Reserves

Reserves for Contingencies

This item allows for the funding of unforseen expenditures which could be needed to supplement other budgeted line items as the need arises.

PARK PLACE
COMMUNITY DEVELOPMENT DISTRICT

GENERAL FUND 101 WINDSOR/MANDOLIN	Fiscal Year 2017 Operating Budget	Current Period Actuals 10/1/2016 - 3/31/2017	Projected Revenues & Expenditures 4/1/17 to 9/30/17	Total Actuals and Projections Through 09/30/17	Over/(Under) Budget Through 09/30/17
REVENUES					
SPECIAL ASSESSMENTS					
O&M Assessments-Tax Roll	215,224.40	210,288.69	9,498.47	219,787.16	4,562.76
TOTAL SPECIAL ASSESSMENTS	**215,224.40**	**210,288.69**	**9,498.47**	**219,787.16**	**4,562.76**
OTHER MISCELLANEOUS REVENUES - W/M					
Undesignated Reserves	11,327.60	0.00	0.00	0.00	(11,327.60)
TOTAL OTHER MISCELLANEOUS REVENUES - W/M	**11,327.60**	**0.00**	**0.00**	**0.00**	**(11,327.60)**
TOTAL REVENUES	**$226,552.00**	**$210,288.69**	**$9,498.47**	**$219,787.16**	**($6,764.84)**
EXPENDITURES					
ELECTRIC UTILITY SERVICES					
Electric Utility Services	40,000.00	12,352.72	17,245.90	29,598.62	(10,401.38)
TOTAL ELECTRIC UTILITY SERVICES	**40,000.00**	**12,352.72**	**17,245.90**	**29,598.62**	**(10,401.38)**
WATER-SEWER COMBINATION SERVICES					
Water Utility Services	1,600.00	420.34	1,179.66	1,600.00	0.00
TOTAL WATER-SEWER COMBINATION SERVICES	**1,600.00**	**420.34**	**1,179.66**	**1,600.00**	**0.00**
OTHER PHYSICAL ENVIRONMENT					
Storm Drain Maintenance	7,500.00	0.00	213.32	213.32	(7,286.68)
General Liability Insurance	7,500.00	0.00	4,644.80	4,644.80	(2,855.20)
Plant Replacement Program	10,000.00	0.00	12,000.00	12,000.00	2,000.00
Landscape Maintenance - Contract	74,100.00	37,050.00	37,050.00	74,100.00	0.00
Landscape Maintenance - Other	12,000.00	21,325.75	1,140.61	22,466.36	10,466.36
Aquatics Maintenance	13,000.00	6,000.00	11,300.00	17,300.00	4,300.00
Aquatics Maintenance - Other	4,000.00	0.00	4,000.00	4,000.00	0.00
Irrigation Maintenance	5,000.00	7,670.00	1,926.79	9,596.79	4,596.79
Entry & Walls Maintenance	4,000.00	1,057.46	2,942.54	4,000.00	0.00
Decorative Light Maintenace	0.00	287.53	202.20	489.73	489.73
Capital Improvements	13,540.00	0.00	7,179.05	7,179.05	(6,360.95)
Pressure Washing - Common Areas	2,000.00	178.00	1,822.00	2,000.00	0.00
TOTAL OTHER PHYSICAL ENVIRONMENT	**152,640.00**	**73,568.74**	**84,421.31**	**157,990.05**	**5,350.05**
ROADWAY, SIGNAGE & STREET LIGHTS					
Pavement & Signage Repairs	5,000.00	0.00	115.99	115.99	(4,884.01)
Sidewalk Maintenance	4,000.00	0.00	1,522.50	1,522.50	(2,477.50)
Decorative Light Maintenance	8,500.00	635.00	7,865.00	8,500.00	0.00
Holiday Decor	1,452.00	4,000.00	510.00	4,510.00	3,058.00
TOTAL ROADWAY, SIGNAGE & STREET LIGHTS	**18,952.00**	**4,635.00**	**10,013.49**	**14,648.49**	**(4,303.51)**
RESERVES					
Transfer to Capital Reserves	13,360.00	0.00	15,950.00	15,950.00	2,590.00
TOTAL RESERVES	**13,360.00**	**0.00**	**15,950.00**	**15,950.00**	**2,590.00**
TOTAL EXPENDITURES	**$226,552.00**	**$90,976.80**	**$128,810.36**	**$219,787.16**	**($6,764.84)**
EXCESS OF REVENUES OVER (UNDER) EXPENDITURES	**$0.00**	**$119,311.89**	**($119,311.89)**	**$0.00**	**$0.00**

FISCAL YEAR 2017 BUDGET ANALYSIS

PARK PLACE
COMMUNITY DEVELOPMENT DISTRICT

GENERAL FUND 101 WINDSOR/MANDOLIN	Fiscal Year 2017 Operating Budget	Total Actuals and Projections Through 09/30/17	Over/(Under) Budget Through 09/30/17	Fiscal Year 2018 Proposed Operating Budget	Increase / (Decrease) from FY 2017 to FY 2018
REVENUES					
SPECIAL ASSESSMENTS					
O&M Assessments-Tax Roll	215,224.40	219,787.16	4,562.76	215,224.40	0.00
TOTAL SPECIAL ASSESSMENTS	**215,224.40**	**219,787.16**	**4,562.76**	**215,224.40**	**0.00**
OTHER MISCELLANEOUS REVENUES - W/M					
Undesignated Reserves	11,327.60	0.00	(11,327.60)	0.00	(11,327.60)
TOTAL OTHER MISCELLANEOUS REVENUES - W/M	**11,327.60**	**0.00**	**(11,327.60)**	**0.00**	**(11,327.60)**
TOTAL REVENUES	**$226,552.00**	**$219,787.16**	**($6,764.84)**	**$215,224.40**	**($11,327.60)**
EXPENDITURES					
ELECTRIC UTILITY SERVICES					
Electric Utility Services	40,000.00	29,598.62	(10,401.38)	35,000.00	(5,000.00)
TOTAL ELECTRIC UTILITY SERVICES	**40,000.00**	**29,598.62**	**(10,401.38)**	**35,000.00**	**(5,000.00)**
WATER-SEWER COMBINATION SERVICES					
Water Utility Services	1,600.00	1,600.00	0.00	1,600.00	0.00
TOTAL WATER-SEWER COMBINATION SERVICES	**1,600.00**	**1,600.00**	**0.00**	**1,600.00**	**0.00**
OTHER PHYSICAL ENVIRONMENT					
Storm Drain Maintenance	7,500.00	213.32	(7,286.68)	5,500.00	(2,000.00)
General Liability Insurance	7,500.00	4,644.80	(2,855.20)	7,500.00	0.00
Plant Replacement Program	10,000.00	12,000.00	2,000.00	10,000.00	0.00
Landscape Maintenance - Contract	74,100.00	74,100.00	0.00	72,000.00	(2,100.00)
Landscape Maintenance - Other	12,000.00	22,466.36	10,466.36	17,000.00	5,000.00
Aquatics Maintenance	13,000.00	17,300.00	4,300.00	15,000.00	2,000.00
Aquatics Maintenance - Other	4,000.00	4,000.00	0.00	3,000.00	(1,000.00)
Irrigation Maintenance	5,000.00	9,596.79	4,596.79	9,000.00	4,000.00
Entry & Walls Maintenance	4,000.00	4,000.00	0.00	3,000.00	(1,000.00)
Decorative Light Maintenace	0.00	489.73	489.73	0.00	0.00
Capital Improvements	13,540.00	7,179.05	(6,360.95)	13,540.00	0.00
Pressure Washing - Common Areas	2,000.00	2,000.00	0.00	2,000.00	0.00
TOTAL OTHER PHYSICAL ENVIRONMENT	**152,640.00**	**157,990.05**	**5,350.05**	**157,540.00**	**4,900.00**
ROADWAY, SIGNAGE & STREET LIGHTS					
Pavement & Signage Repairs	5,000.00	115.99	(4,884.01)	5,000.00	0.00
Sidewalk Maintenance	4,000.00	1,522.50	(2,477.50)	2,000.00	(2,000.00)
Decorative Light Maintenance	8,500.00	8,500.00	0.00	8,500.00	0.00
Holiday Decor	1,452.00	4,510.00	3,058.00	4,400.00	2,948.00
TOTAL ROADWAY, SIGNAGE & STREET LIGHTS	**18,952.00**	**14,648.49**	**(4,303.51)**	**19,900.00**	**948.00**
RESERVES					
Transfer to Capital Reserves	13,360.00	15,950.00	2,590.00	1,184.40	(12,175.60)
TOTAL RESERVES	**13,360.00**	**15,950.00**	**2,590.00**	**1,184.40**	**(12,175.60)**
TOTAL EXPENDITURES	**$226,552.00**	**$219,787.16**	**($6,764.84)**	**$215,224.40**	**($11,327.60)**
EXCESS OF REVENUES OVER (UNDER) EXPENDITURES	**$0.00**	**$0.00**	**$0.00**	**$0.00**	**$0.00**

GENERAL FUND 101

Electric Utility Services

Electric Utility Services - Entry

This item is for electricity services for irrigation well pump, street lights, aesthetic uplighting, sidewalks and other common areas.

Other Physical Environment

Storm Drain Maintenance

This item is for maintaining the storm drain structures that require yearly upkeep and occasional repair.

General Liability Insurance

The District carries $1,000,000 in general liability and also has sovereign immunity.

Landscape Maintenance - Contract

The District contracts with a professional landscape firm to provide service through a public bid process. This fee does not include replacement material or irrigation repairs.

Landscape Maintenance - Other

This item is for any unforeseen circumstances that may effect the appearance of the landscape program.

Plant Replacement Program

This item is for landscape items that may need to be replaced during the year as certain material extends its useful life expectancy.

Irrigation Maintenance

Repairs necessary for everyday operation of the irrigation system to ensure its effectiveness. This item also cover repairs to the Districts wells and electrical components.

Entry & Walls Maintenance

This item is for maintaining the main entry feature and other common area walls.

Road & Street Facilities

Decorative Light Maintenance

This item provides for maintenance and repairs of the street lights and decorative lighting throughout the District.

Sidewalk Maintenance

This item is for maintenance of the District owned sidewalk system.

Pavement and Signage Repairs

This item provides for maintenance and repairs of the signage throughout the District.

Street Sweeping

This item provides for cleaning of the District roadways.

Reserves

Capital Reserves

This item creates a fund for capital improvements relating to the District's parks and recreational areas.

Operational Reserves

This item is intended develop ample reserves at the end of the fiscal year to allow the District to operate until the property taxes come in.

PARK PLACE
COMMUNITY DEVELOPMENT DISTRICT

GENERAL FUND 102 HIGHLAND PARK	Fiscal Year 2017 Operating Budget	Current Period Actuals 10/1/2016 - 3/31/2017	Projected Revenues & Expenditures 4/1/17 to 9/30/17	Total Actuals and Projections Through 09/30/17	Over/(Under) Budget Through 09/30/17
REVENUES					
SPECIAL ASSESSMENTS					
O&M Assessments-Tax Roll	288,518.75	284,075.64	10,559.71	294,635.35	6,116.60
TOTAL SPECIAL ASSESSMENTS	**288,518.75**	**284,075.64**	**10,559.71**	**294,635.35**	**6,116.60**
OTHER MISCELLANEOUS REVENUES - H/P					
Undesignated Reserves	15,186.25	0.00	0.00	0.00	(15,186.25)
TOTAL OTHER MISCELLANEOUS REVENUES - H/P	**15,186.25**	**0.00**	**0.00**	**0.00**	**(15,186.25)**
TOTAL REVENUES	**$303,705.00**	**$284,075.64**	**$10,559.71**	**$294,635.35**	**($9,069.65)**
EXPENDITURES					
ELECTRIC UTILITY SERVICES					
Electric Utility Services	5,500.00	5,361.69	5,361.69	10,723.38	5,223.38
TOTAL ELECTRIC UTILITY SERVICES	**5,500.00**	**5,361.69**	**5,361.69**	**10,723.38**	**5,223.38**
WATER-SEWER COMBINATION SERVICES					
Water Utility Services	4,000.00	3,448.94	1,727.73	5,176.67	1,176.67
TOTAL WATER-SEWER COMBINATION SERVICES	**4,000.00**	**3,448.94**	**1,727.73**	**5,176.67**	**1,176.67**
OTHER PHYSICAL ENVIRONMENT					
Storm Drain Maintenance	13,000.00	0.00	2,350.25	2,350.25	(10,649.75)
General Liability Insurance	5,000.00	0.00	5,000.00	5,000.00	0.00
Plant Replacement Program	11,250.00	7,490.71	16,081.40	23,572.11	12,322.11
Plant Replacement Program - Racetrack Road	9,077.00	1,275.90	1,275.90	2,551.80	(6,525.20)
Landscape Maintenance - Other	12,348.00	14,389.07	11,630.61	26,019.68	13,671.68
Landscape Installation/Maintenance - Race Track Rd	16,171.00	277.50	20,510.46	20,787.96	4,616.96
Aquatics Maintenance	26,205.00	13,802.49	15,214.74	29,017.23	2,812.23
Landscape Maintenance - Highland Park Contract	60,696.00	38,132.10	28,816.03	66,948.13	6,252.13
Landscape Maintenance - Racetrack Road Contract	17,946.00	8,973.00	5,569.37	14,542.37	(3,403.63)
Irrigation Maintenance	9,375.00	17,244.95	6,045.81	23,290.76	13,915.76
Entry & Walls Maintenance	1,875.00	1,731.00	418.69	2,149.69	274.69
Miscellaneous Repairs & Maintenance	0.00	270.00	948.00	1,218.00	1,218.00
Pressure Washing - Common Areas	1,890.00	3,654.75	3,654.75	7,309.50	5,419.50
TOTAL OTHER PHYSICAL ENVIRONMENT	**184,833.00**	**107,241.47**	**117,516.01**	**224,757.48**	**39,924.48**
ROADWAY, SIGNAGE & STREET LIGHTS					
Pavement & Signage Repairs	5,000.00	607.50	4,219.53	4,827.03	(172.97)
Sidewalk Maintenance	2,063.00	0.00	3,854.01	3,854.01	1,791.01
Street Light Maintenance	6,000.00	2,284.50	4,764.14	7,048.64	1,048.64
Decorative Light Maintenance	2,000.00	142.39	1,641.27	1,783.66	(216.34)
Holiday Decor	750.00	11,625.00	2,086.88	13,711.88	12,961.88
TOTAL ROADWAY, SIGNAGE & STREET LIGHTS	**15,813.00**	**14,659.39**	**16,565.83**	**31,225.22**	**15,412.22**
PARKS & RECREATION					
Off Duty Deputy Services	0.00	0.00	1,154.46	1,154.46	1,154.46
Fountain Maintenance	750.00	744.75	1,096.37	1,841.12	1,091.12
Park Facility Janitorial Maintenance Contracted	2,888.00	420.00	569.52	989.52	(1,898.48)
Park Facility Maintenance and Improvement	5,000.00	967.50	0.00	967.50	(4,032.50)
TOTAL PARKS & RECREATION	**8,638.00**	**2,132.25**	**2,820.35**	**4,952.60**	**(3,685.40)**
RESERVES					
Transfer to Operating Reserve	62,421.00	0.00	12,000.00	12,000.00	(50,421.00)
Transfer to Capital Reserves	22,500.00	0.00	5,800.00	5,800.00	(16,700.00)
TOTAL RESERVES	**84,921.00**	**0.00**	**17,800.00**	**17,800.00**	**(67,121.00)**
TOTAL EXPENDITURES	**$303,705.00**	**$132,843.74**	**$161,791.61**	**$294,635.35**	**($9,069.65)**
EXCESS OF REVENUES OVER (UNDER) EXPENDITURES	**$0.00**	**$151,231.90**	**($151,231.90)**	**$0.00**	**$0.00**

FISCAL YEAR 2017 BUDGET ANALYSIS

PARK PLACE
COMMUNITY DEVELOPMENT DISTRICT

GENERAL FUND 102
HIGHLAND PARK

	Fiscal Year 2017 Operating Budget	Total Actuals and Projections Through 09/30/17	Over/(Under) Budget Through 09/30/17	Fiscal Year 2018 Proposed Operating Budget	Increase / (Decrease) from FY 2017 to FY 2018
REVENUES					
SPECIAL ASSESSMENTS					
O&M Assessments-Tax Roll	288,518.75	294,635.35	6,116.60	288,518.75	0.00
TOTAL SPECIAL ASSESSMENTS	**288,518.75**	**294,635.35**	**6,116.60**	**288,518.75**	**0.00**
OTHER MISCELLANEOUS REVENUES - H/P					
Undesignated Reserves	15,186.25	0.00	(15,186.25)	0.00	(15,186.25)
TOTAL OTHER MISCELLANEOUS REVENUES - H/P	**15,186.25**	**0.00**	**(15,186.25)**	**0.00**	**(15,186.25)**
TOTAL REVENUES	**$303,705.00**	**$294,635.35**	**($9,069.65)**	**$288,518.75**	**($15,186.25)**
EXPENDITURES					
ELECTRIC UTILITY SERVICES					
Electric Utility Services	5,500.00	10,723.38	5,223.38	8,500.00	3,000.00
TOTAL ELECTRIC UTILITY SERVICES	**5,500.00**	**10,723.38**	**5,223.38**	**8,500.00**	**3,000.00**
WATER-SEWER COMBINATION SERVICES					
Water Utility Services	4,000.00	5,176.67	1,176.67	5,000.00	1,000.00
TOTAL WATER-SEWER COMBINATION SERVICES	**4,000.00**	**5,176.67**	**1,176.67**	**5,000.00**	**1,000.00**
OTHER PHYSICAL ENVIRONMENT					
Storm Drain Maintenance	13,000.00	2,350.25	(10,649.75)	10,000.00	(3,000.00)
General Liability Insurance	5,000.00	5,000.00	0.00	5,000.00	0.00
Plant Replacement Program	11,250.00	23,572.11	12,322.11	11,250.00	0.00
Plant Replacement Program - Racetrack Road	9,077.00	2,551.80	(6,525.20)	9,077.00	0.00
Landscape Maintenance - Other	12,348.00	26,019.68	13,671.68	0.00	(12,348.00)
Landscape Installation/Maintenance - Race Track Rd	16,171.00	20,787.96	4,616.96	0.00	(16,171.00)
Aquatics Maintenance	26,205.00	29,017.23	2,812.23	26,205.00	0.00
Landscape Maintenance - Highland Park Contract	60,696.00	66,948.13	6,252.13	93,696.00	33,000.00
Landscape Maintenance - Racetrack Road Contract	17,946.00	14,542.37	(3,403.63)	24,946.00	7,000.00
Irrigation Maintenance	9,375.00	23,290.76	13,915.76	14,375.00	5,000.00
Entry & Walls Maintenance	1,875.00	2,149.69	274.69	1,875.00	0.00
Miscellaneous Repairs & Maintenance	0.00	1,218.00	1,218.00	0.00	0.00
Pressure Washing - Common Areas	1,890.00	7,309.50	5,419.50	4,890.00	3,000.00
TOTAL OTHER PHYSICAL ENVIRONMENT	**184,833.00**	**224,757.48**	**39,924.48**	**201,314.00**	**16,481.00**
ROADWAY, SIGNAGE & STREET LIGHTS					
Pavement & Signage Repairs	5,000.00	4,827.03	(172.97)	3,000.00	(2,000.00)
Sidewalk Maintenance	2,063.00	3,854.01	1,791.01	2,063.00	0.00
Street Light Maintenance	6,000.00	7,048.64	1,048.64	6,000.00	0.00
Decorative Light Maintenance	2,000.00	1,783.66	(216.34)	2,000.00	0.00
Holiday Decor	750.00	13,711.88	12,961.88	5,750.00	5,000.00
TOTAL ROADWAY, SIGNAGE & STREET LIGHTS	**15,813.00**	**31,225.22**	**15,412.22**	**18,813.00**	**3,000.00**
PARKS & RECREATION					
Off Duty Deputy Services	0.00	1,154.46	1,154.46	1,000.00	1,000.00
Fountain Maintenance	750.00	1,841.12	1,091.12	750.00	0.00
Park Facility Janitorial Maintenance Contracted	2,888.00	989.52	(1,898.48)	1,388.00	(1,500.00)
Park Facility Maintenance and Improvement	5,000.00	967.50	(4,032.50)	1,000.00	(4,000.00)
TOTAL PARKS & RECREATION	**8,638.00**	**4,952.60**	**(3,685.40)**	**4,138.00**	**(4,500.00)**
RESERVES					
Transfer to Operating Reserve	62,421.00	12,000.00	(50,421.00)	30,253.75	(32,167.25)
Transfer to Capital Reserves	22,500.00	5,800.00	(16,700.00)	20,500.00	(2,000.00)
TOTAL RESERVES	**84,921.00**	**17,800.00**	**(67,121.00)**	**50,753.75**	**(34,167.25)**
TOTAL EXPENDITURES	**$303,705.00**	**$294,635.35**	**($9,069.65)**	**$288,518.75**	**($15,186.25)**
EXCESS OF REVENUES OVER (UNDER) EXPENDITURES	**$0.00**	**$0.00**	**$0.00**	**$0.00**	**$0.00**

Electric Utility Services

Electric Utility Services

This item is for street lights, irrigation pumps and other common electricity needs.

Garbage/Solid Waste Control Services

Garbage Collection

This item is for pick up at the recreation facility and parks as needed.

Water-Sewer Combination Services

Water Utility Services

This item is for the potable and non-potable water used for irrigation, recreation facility and the pool.

Water Utility Services - Capital Outlay

Improvements to water services including connections to reclaimed water for irrigation.

Other Physical Environment

Storm Drain Maintenance

This item is for maintaining the storm drain structures that require yearly upkeep and occasional repair.

General Liability Insurance

The District carries $1,000,000 in general liability and also has sovereign immunity.

Landscape Maintenance - Contract

The District contracts with a professional landscape firm to provide service through a public bid process. This fee does not include replacement material or irrigation repairs.

Landscape Maintenance - Other

This item is for additional maintenance costs such as removal of dead vegetation or tree trimming .

Landscape Maintenance - Consulting

This item is for maintaining the supervison and inspections provided by OLM.

Landscape Maintenance - Race Track

This item is for maintaining Race Track Rd. ROW .

Plant Replacement Program

This item is for landscape items that may need to be replaced during the year as certain material extends its useful life expectancy.

Irrigation Maintenance

Repairs necessary for everyday operation of and supply to the irrigation system to ensure its effectiveness. This item also cover repairs to the Districts wells and electrical components.

Entry & Walls Maintenance

This item is for maintaining the main entry feature and other common area walls.

Roadway, Signage & Streetlight

Street Sweeping

This item is for sweeping the streets.

Pavement Repairs

This item is for miscellaneous repairs to the roadways and pavers as needed.

Signage Maintenance

This item is intended for repairing the Districts street signage.

Street Light Maintenance

This is for the maintenance of the ornamental street lights.

Decorative Light Maintenance

This item is for the repairs and maintenance to up-lighting enhancements within the development and at entrances.

Parks & Recreation

Fountain Maintenance

This item is for maintaining the decorative fountains.

Park Facility Maintenance

This item is for repairs to the tennis courts, volleyball courts and other park infrastructure.

Reserves

Capital Reserves

This item creates a fund for capital improvements relating to the District's parks and recreational areas.

Operational Reserves

This item is intended develop ample reserves at the end of the fiscal year to allow the District to operate until property taxes come in.

PARK PLACE
COMMUNITY DEVELOPMENT DISTRICT

GENERAL FUND 103 MIXED USE	Fiscal Year 2017 Operating Budget	Current Period Actuals 10/1/2016 - 3/31/2017	Projected Revenues & Expenditures 4/1/17 to 9/30/17	Total Actuals and Projections Through 09/30/17	Over/(Under) Budget Through 09/30/17
REVENUES					
SPECIAL ASSESSMENTS					
O&M Assessments-Tax Roll	75,457.55	73,726.97	3,330.28	77,057.25	1,599.70
TOTAL SPECIAL ASSESSMENTS	**75,457.55**	**73,726.97**	**3,330.28**	**77,057.25**	**1,599.70**
OTHER MISCELLANEOUS REVENUES - MIXED USE					
Undesignated Reserves	3,972.45	0.00	0.00	0.00	(3,972.45)
TOTAL OTHER MISCELLANEOUS REVENUES - MIXED USE	**3,972.45**	**0.00**	**0.00**	**0.00**	**(3,972.45)**
TOTAL REVENUES	**$79,430.00**	**$73,726.97**	**$3,330.28**	**$77,057.25**	**($2,372.75)**
EXPENDITURES					
ELECTRIC UTILITY SERVICES					
Electric Utility Services	1,800.00	604.70	801.47	1,406.17	(393.83)
TOTAL ELECTRIC UTILITY SERVICES	**1,800.00**	**604.70**	**801.47**	**1,406.17**	**(393.83)**
WATER-SEWER COMBINATION SERVICES					
Water Utility Services	1,425.00	1,149.91	275.09	1,425.00	0.00
TOTAL WATER-SEWER COMBINATION SERVICES	**1,425.00**	**1,149.91**	**275.09**	**1,425.00**	**0.00**
OTHER PHYSICAL ENVIRONMENT					
Storm Drain Maintenance	3,852.00	0.00	183.75	183.75	(3,668.25)
General Liability Insurance	1,650.00	0.00	1,233.62	1,233.62	(416.38)
Plant Replacement Program	3,750.00	2,496.91	2,496.91	4,993.82	1,243.82
Plant Replacement Program - Racetrack Road	3,026.00	425.30	245.49	670.79	(2,355.21)
Landscape Maintenance - Other	4,000.00	4,129.68	3,934.62	8,064.30	4,064.30
Landscape Installation/Maintenance - Race Track Rd	5,000.00	92.50	4,907.50	5,000.00	0.00
Aquatics Maintenance	8,735.00	4,600.84	4,134.16	8,735.00	0.00
Landscape Maintenance - Highland Park Contract	20,232.00	12,710.71	7,521.29	20,232.00	0.00
Landscape Maintenance - Racetrack Road Contract	5,982.00	2,991.00	1,792.52	4,783.52	(1,198.48)
Irrigation Maintenance	3,125.00	5,748.20	1,208.76	6,956.96	3,831.96
Entry & Walls Maintenance	625.00	577.00	139.56	716.56	91.56
Miscellaneous Repairs & Maintenance	0.00	90.00	90.00	180.00	180.00
Pressure Washing - Common Areas	630.00	1,248.25	1,161.05	2,409.30	1,779.30
TOTAL OTHER PHYSICAL ENVIRONMENT	**60,607.00**	**35,110.39**	**29,049.23**	**64,159.62**	**3,552.62**
ROADWAY, SIGNAGE & STREET LIGHTS					
Pavement & Signage Repairs	1,650.00	202.50	966.18	1,168.68	(481.32)
Sidewalk Maintenance	688.00	0.00	211.34	211.34	(476.66)
Street Light Maintenance	2,000.00	761.50	1,238.50	2,000.00	0.00
Decorative Light Maintenance	650.00	47.46	444.83	492.29	(157.71)
Holiday Decor	250.00	3,875.00	695.63	4,570.63	4,320.63
TOTAL ROADWAY, SIGNAGE & STREET LIGHTS	**5,238.00**	**4,886.46**	**3,556.48**	**8,442.94**	**3,204.94**
PARKS & RECREATION					
Off Duty Deputy Services	0.00	0.00	331.62	331.62	331.62
Fountain Maintenance	250.00	298.25	351.11	649.36	399.36
Park Facility Janitorial Maintenance Contracted	960.00	140.00	180.04	320.04	(639.96)
Park Facility Maintenance and Improvement	1,650.00	322.50	0.00	322.50	(1,327.50)
TOTAL PARKS & RECREATION	**2,860.00**	**760.75**	**862.77**	**1,623.52**	**(1,236.48)**
RESERVES					
Transfer to Capital Reserves	7,500.00	0.00	0.00	0.00	(7,500.00)
TOTAL RESERVES	**7,500.00**	**0.00**	**0.00**	**0.00**	**(7,500.00)**
TOTAL EXPENDITURES	**$79,430.00**	**$42,512.21**	**$34,545.04**	**$77,057.25**	**($2,372.75)**
EXCESS OF REVENUES OVER (UNDER) EXPENDITURES	**$0.00**	**$31,214.76**	**($31,214.76)**	**$0.00**	**$0.00**

PARK PLACE
COMMUNITY DEVELOPMENT DISTRICT

GENERAL FUND 103
MIXED USE

	Fiscal Year 2017 Operating Budget	Total Actuals and Projections Through 09/30/17	Over/(Under) Budget Through 09/30/17	Fiscal Year 2018 Proposed Operating Budget	Increase / (Decrease) from FY 2017 to FY 2018
REVENUES					
SPECIAL ASSESSMENTS					
O&M Assessments-Tax Roll	75,457.55	77,057.25	1,599.70	75,457.55	0.00
TOTAL SPECIAL ASSESSMENTS	**75,457.55**	**77,057.25**	**1,599.70**	**75,457.55**	**0.00**
OTHER MISCELLANEOUS REVENUES - MIXED USE					
Undesignated Reserves	3,972.45	0.00	(3,972.45)		(3,972.45)
TOTAL OTHER MISCELLANEOUS REVENUES - MIXED USE	**3,972.45**	**0.00**	**(3,972.45)**	**0.00**	**(3,972.45)**
TOTAL REVENUES	**$79,430.00**	**$77,057.25**	**($2,372.75)**	**$75,457.55**	**($3,972.45)**
EXPENDITURES					
ELECTRIC UTILITY SERVICES					
Electric Utility Services	1,800.00	1,406.17	(393.83)	1,800.00	0.00
TOTAL ELECTRIC UTILITY SERVICES	**1,800.00**	**1,406.17**	**(393.83)**	**1,800.00**	**0.00**
WATER-SEWER COMBINATION SERVICES					
Water Utility Services	1,425.00	1,425.00	0.00	1,425.00	0.00
TOTAL WATER-SEWER COMBINATION SERVICES	**1,425.00**	**1,425.00**	**0.00**	**1,425.00**	**0.00**
OTHER PHYSICAL ENVIRONMENT					
Storm Drain Maintenance	3,852.00	183.75	(3,668.25)	1,352.00	(2,500.00)
General Liability Insurance	1,650.00	1,233.62	(416.38)	1,650.00	0.00
Plant Replacement Program	3,750.00	4,993.82	1,243.82	3,750.00	0.00
Plant Replacement Program - Racetrack Road	3,026.00	670.79	(2,355.21)	3,026.00	0.00
Landscape Maintenance - Other	4,000.00	8,064.30	4,064.30	4,000.00	0.00
Landscape Installation/Maintenance - Race Track Rd	5,000.00	5,000.00	0.00	5,000.00	0.00
Aquatics Maintenance	8,735.00	8,735.00	0.00	8,735.00	0.00
Landscape Maintenance - Highland Park Contract	20,232.00	20,232.00	0.00	20,232.00	0.00
Landscape Maintenance - Racetrack Road Contract	5,982.00	4,783.52	(1,198.48)	4,982.00	(1,000.00)
Irrigation Maintenance	3,125.00	6,956.96	3,831.96	6,125.00	3,000.00
Entry & Walls Maintenance	625.00	716.56	91.56	625.00	0.00
Miscellaneous Repairs & Maintenance	0.00	180.00	180.00	0.00	0.00
Pressure Washing - Common Areas	630.00	2,409.30	1,779.30	630.00	0.00
TOTAL OTHER PHYSICAL ENVIRONMENT	**60,607.00**	**64,159.62**	**3,552.62**	**60,107.00**	**(500.00)**
ROADWAY, SIGNAGE & STREET LIGHTS					
Pavement & Signage Repairs	1,650.00	1,168.68	(481.32)	1,650.00	0.00
Sidewalk Maintenance	688.00	211.34	(476.66)	688.00	0.00
Street Light Maintenance	2,000.00	2,000.00	0.00	2,000.00	0.00
Decorative Light Maintenance	650.00	492.29	(157.71)	650.00	0.00
Holiday Decor	250.00	4,570.63	4,320.63	250.00	0.00
TOTAL ROADWAY, SIGNAGE & STREET LIGHTS	**5,238.00**	**8,442.94**	**3,204.94**	**5,238.00**	**0.00**
PARKS & RECREATION					
Off Duty Deputy Services	0.00	331.62	331.62	0.00	0.00
Fountain Maintenance	250.00	649.36	399.36	250.00	0.00
Park Facility Janitorial Maintenance Contracted	960.00	320.04	(639.96)	960.00	0.00
Park Facility Maintenance and Improvement	1,650.00	322.50	(1,327.50)	650.00	(1,000.00)
TOTAL PARKS & RECREATION	**2,860.00**	**1,623.52**	**(1,236.48)**	**1,860.00**	**(1,000.00)**
RESERVES					
Transfer to Capital Reserves	7,500.00	0.00	(7,500.00)	5,027.55	(2,472.45)
TOTAL RESERVES	**7,500.00**	**0.00**	**(7,500.00)**	**5,027.55**	**(2,472.45)**
TOTAL EXPENDITURES	**$79,430.00**	**$77,057.25**	**($2,372.75)**	**$75,457.55**	**($3,972.45)**
EXCESS OF REVENUES OVER (UNDER) EXPENDITURES	**$0.00**	**$0.00**	**$0.00**	**$0.00**	**$0.00**

GENERAL FUND 103

Electric Utility Services

Electric Utility Services

This item is for street lights, irrigation pumps and other common electricity needs.

Water-Sewer Combination Services

Water Utility Services

This item is for the potable and non-potable water used for irrigation, recreation facility and the pool.

Other Physical Environment

Storm Drain Maintenance

This item is for maintaining the storm drain structures that require yearly upkeep and occasional repair.

General Liability Insurance

The District carries $1,000,000 in general liability and also has sovereign immunity.

Landscape Maintenance - Contract

The District contracts with a professional landscape firm to provide service through a public bid process. This fee does not include replacement material or irrigation repairs.

Landscape Maintenance - Other

This item is for additional maintenance costs such as removal of dead vegetation or tree trimming .

Landscape Maintenance - Consulting

This item is for maintaining the supervison and inspections provided by OLM.

Landscape Maintenance - Race Track

This item is for maintaining the Race Track Rd. ROW.

Plant Replacement Program

This item is for landscape items that may need to be replaced during the year as certain material extends its useful life expectancy.

Irrigation Maintenance

Repairs necessary for everyday operation of and supply to the irrigation system to ensure its effectiveness. This item also cover repairs to the Districts wells and electrical components.

Entry & Walls Maintenance

This item is for maintaining the main entry feature and other common area walls.

Roadway, Signage & Streetlight

Street Sweeping

This item is for sweeping the streets.

Pavement Repairs

This item is for miscellaneous repairs to the roadways and pavers as needed.

Signage Maintenance

This item is intended for repairing the Districts street signage.

Street Light Maintenance

This is for the maintenance of the ornamental street lights.

GENERAL FUND 103

Decorative Light Maintenance

This item is for the repairs and maintenance to up-lighting enhancements within the development and at

Fountain Maintenance

This item is for maintaining the decorative fountains.

Park Facility Maintenance

This item is for repairs to the tennis courts, volleyball courts and other park infrastructure.

Reserves

Capital Reserves

This item creates a fund for capital improvements relating to the District's parks and recreational areas.

Operational Reserves

This item is intended develop ample reserves at the end of the fiscal year to allow the District to operate until property taxes come in.

PARK PLACE
COMMUNITY DEVELOPMENT DISTRICT

DEBT SERVICE FUND
SERIES 2008 - WINDSOR/MANDOLIN

REVENUES		
CDD Debt Service Assessments	$	189,243
TOTAL REVENUES	**$**	**189,243**

EXPENDITURES		
Series 2008 May Bond Principal Payment	$	95,000
Series 2008 May Bond Interest Payment	$	48,259
Series 2008 November Bond Interest Payment	$	45,984
TOTAL EXPENDITURES	**$**	**189,243**
EXCESS OF REVENUES OVER EXPENDITURES	**$**	**-**

ANALYSIS OF BONDS OUTSTANDING		
Bonds Outstanding - Period Ending 11/1/2017	$	2,015,000
Principal Payment Applied Toward Series 2008 Bonds	$	95,000
Bonds Outstanding - Period Ending 11/1/2018	**$**	**1,920,000**

PARK PLACE
COMMUNITY DEVELOPMENT DISTRICT

DEBT SERVICE FUND
SERIES 2014 - HIGHLAND PARK

REVENUES		
CDD Debt Service Assessments	$	326,563
TOTAL REVENUES	**$**	**326,563**

EXPENDITURES		
Series 2014 May Bond Principal Payment	$	155,000
Series 2014 May Bond Interest Payment	$	87,525
Series 2014 November Bond Interest Payment	$	84,038
TOTAL EXPENDITURES	**$**	**326,563**
EXCESS OF REVENUES OVER EXPENDITURES	**$**	**-**

ANALYSIS OF BONDS OUTSTANDING		
Bonds Outstanding - Period Ending 11/1/2017	$	3,890,000
Principal Payment Applied Toward Series 2014 Bonds	$	155,000
Bonds Outstanding - Period Ending 11/1/2018	**$**	**3,735,000**

PARK PLACE
COMMUNITY DEVELOPMENT DISTRICT

SCHEDULE OF ANNUAL ASSESSMENTS (1)

Lot Size	ERU Factor	Lot Count	Total ERU's	Debt Service - Series 2008	Debt Service - Series 2014	General Fund 100	General Fund 101	General Fund 102	General Fund 103	Fiscal Year 2018 Total	Fiscal Year 2017 Total	Total Inc/(Dec) in Annual Assmt (2)
Mandolin [1]												
Single Family 50'	1.00	101	176.75	$627.70	$0.00	$220.23	$830.81	$0.00	$0.00	**$1,678.74**	$1,678.74	**$0.00**
Single Family 60'	1.20	108	216	$717.36	$0.00	$220.23	$830.81	$0.00	$0.00	**$1,768.40**	$1,768.40	**$0.00**
Windsor [1]												
Townhome	0.37	182	182	$358.69	$0.00	$73.85	$331.32	$0.00	$0.00	**$763.86**	$763.86	**$0.00**
Highland Park [1]												
Townhome 22'	0.44	40	17.6	$0.00	$725.70	$191.72	$0.00	$901.26	$0.00	**$1,818.68**	$1,818.68	**$0.00**
Townhome 25'/26'	0.52	60	31.2	$0.00	$742.28	$191.72	$0.00	$904.51	$0.00	**$1,838.50**	$1,838.50	**$0.00**
Townhome 28'	0.56	25	14	$0.00	$783.75	$191.72	$0.00	$912.61	$0.00	**$1,888.08**	$1,888.08	**$0.00**
Single Family 40'	0.80	58	46.4	$0.00	$825.22	$191.72	$0.00	$920.71	$0.00	**$1,937.65**	$1,937.65	**$0.00**
Single Family 50'	1.00	44	44	$0.00	$1,030.90	$191.72	$0.00	$960.92	$0.00	**$2,183.54**	$2,183.54	**$0.00**
Single Family 70'	1.40	54	75.6	$0.00	$1,443.93	$191.72	$0.00	$1,041.64	$0.00	**$2,677.29**	$2,677.29	**$0.00**
Single Family 80'	1.60	29	46.4	$0.00	$1,650.44	$191.72	$0.00	$1,082.01	$0.00	**$2,924.16**	$2,924.16	**$0.00**
Single Family 90'	1.80	5	9	$0.00	$1,856.12	$191.72	$0.00	$1,122.21	$0.00	**$3,170.05**	$3,170.05	**$0.00**
Single Family 150'	3.00	9	27	$0.00	$2,681.31	$191.72	$0.00	$1,283.53	$0.00	**$4,156.56**	$4,156.56	**$0.00**
Mixed Use[1]												
Apartments	0.35	239	83.65	$0.00	$0.00	$69.34	$0.00	$0.00	$276.76	**$346.10**	$346.10	**$0.00**
School	1.00	10	10	$0.00	$1,237.42	$72.47	$0.00	$241.85	$353.72	**$1,905.46**	$1,905.46	**$0.00**
Commercial	3.00	5.2	15.6	$0.00	$0.00	$600.42	$0.00	$0.00	$2,372.25	**$2,972.67**	$2,972.67	**$0.00**

Notations:

(1) Annual assessments are adjusted for collection costs and early payment discounts of 8%.

(2) An increase in assessments creates a positive figure; conversely, a decrease in assessments creates a negative figure.

Park Place Community Development District

Basic Financial Statements
For the Year Ended September 30, 2016

Park Place Community Development District

Table of Contents

Independent Auditor's Report	1-2
Management's Discussion and Analysis (Not Covered by Independent Auditor’s Report)	3-6
Basic Financial Statements	
Government-wide Financial Statements:	
Statement of Net Position	7
Statement of Activities	8
Fund Financial Statements:	
Balance Sheet - Governmental Funds	9
Reconciliation of the Balance Sheet of Governmental Funds to the Statement of Net Position	10
Statement of Revenues, Expenditures and Changes in Fund Balances - Governmental Funds	11
Reconciliation of the Statement of Revenues, Expenditures and Changes in Fund Balances of Governmental Funds to the Statement of Activities	12
Statement of Revenues, Expenditures and Change in Fund Balance - Budget and Actual - General Fund	13
Notes to Basic Financial Statements	14-22
Other Reports of Independent Auditors	
Independent Auditor’s Report on Internal Control over Financial Reporting and on Compliance and Other Matters Based on an Audit of Financial Statements Performed in Accordance with Government Auditing Standards	23-24
Independent Auditor’s Report to District Management	25-26
Independent Auditor’s Report on Compliance with Section 218.415, Florida Statutes	27

INDEPENDENT AUDITOR'S REPORT

To the Board of Supervisors
Park Place Community Development District
Hillsborough County, Florida

Report on the Financial Statements

We have audited the accompanying financial statements of the governmental activities and each major fund of Park Place Community Development District (the "District") as of and for the year ended September 30, 2016, and the related notes to the financial statements, which collectively comprise the District's basic financial statements, as listed in the table of contents.

Management's Responsibility for the Financial Statements

Management is responsible for the preparation and fair presentation of these financial statements in accordance with accounting principles generally accepted in the United States of America; this includes the design, implementation, and maintenance of internal control relevant to the preparation and fair presentation of financial statements that are free from material misstatement, whether due to fraud or error.

Auditor's Responsibility

Our responsibility is to express opinions on these financial statements based on our audit. We conducted our audit in accordance with auditing standards generally accepted in the United States of America and the standards applicable to financial audits contained in *Government Auditing Standards*, issued by the Controller General of the United States. Those standards require that we plan and perform the audit to obtain reasonable assurance about whether the financial statements are free from material misstatement.

An audit involves performing procedures to obtain audit evidence about the amounts and disclosures in the financial statements. The procedures selected depend on the auditor's judgment, including the assessment of the risks of material misstatement of the financial statements, whether due to fraud or error. In making those risk assessments, the auditor considers internal control relevant to the entity's preparation and fair presentation of the financial statements in order to design audit procedures that are appropriate in the circumstances, but not for the purpose of expressing an opinion on the effectiveness of the entity's internal control. Accordingly, we express no such opinion. An audit also includes evaluating the appropriateness of accounting policies used and the reasonableness of significant accounting estimates made by management, as well as evaluating the overall presentation of the financial statements.

We believe that the audit evidence we have obtained is sufficient and appropriate to provide a basis for our audit opinions.

Opinions

In our opinion, the financial statements referred to above present fairly, in all material respects, the respective financial position of the governmental activities and the major funds of the District as of September 30, 2016, and the respective changes in financial position and the respective budgetary comparison for the General Fund for the year then ended in accordance with accounting principles generally accepted in the United States of America.

Other Matters

Required Supplementary Information

Accounting principles generally accepted in the United States of America require that the management's discussion and analysis on pages 3 through 6 be presented to supplement the basic financial statements. Such information, although not a part of the basic financial statements, is required by the Government Accounting Standards Board, who considers it to be an essential part of financial reporting for placing the basic financial statements in an appropriate operational, economic, or historical context. We have applied certain limited procedures to the required supplementary information in accordance with auditing standards generally accepted in the United States of America, which consisted of inquiries of management about the methods of preparing the information and comparing the information for consistency with management's responses to our inquiries, the basic financial statements, and other knowledge we obtained during our audit of the basic financial statements. We do not express an opinion or provide any assurance on the information because the limited procedures do not provide us with sufficient evidence to express an opinion or provide any assurance.

Other Reporting Required by *Government Auditing Standards*

In accordance with *Government Auditing Standards*, we have also issued our report dated April 26, 2017, on our consideration of the District's internal control over financial reporting and on our tests of its compliance with certain provisions of laws, regulations, contracts, and grant agreements and other matters. The purpose of that report is to describe the scope of our testing of internal control over financial reporting and compliance and the results of that testing, and not to provide an opinion on internal control over financial reporting or on compliance. That report is an integral part of an audit performed in accordance with *Government Auditing Standards* in considering the District's internal control over financial reporting and compliance.

Keefe McCullough

KEEFE McCULLOUGH

Fort Lauderdale, Florida
April 26, 2017

Our discussion and analysis of Park Place Community Development District's (the "District") financial performance provides an overview of the District's financial activities for the years ended September 30, 2016 and 2015. Please read it in conjunction with the District's basic financial statements, which immediately follow this discussion.

Financial Highlights

The following are the highlights of financial activity for the year ended September 30, 2016:

- The District's total assets exceeded its liabilities at September 30, 2016 by $ 3,783,891.

- The District's total revenues were $ 1,309,681, $ 1,309,545 from non-ad valorem assessments, and $ 136 from interest income. The District's expenses for this year were $ 1,288,180.

Overview of the Financial Statements

This discussion and analysis is intended to serve as an introduction to the District's basic financial statements. The basic financial statements are comprised of three components: 1) government-wide financial statements, 2) fund financial statements, and 3) notes to basic financial statements.

Government-Wide Financial Statements: The government-wide financial statements, which consist of the following two statements, are designed to provide readers with a broad overview of the District's finances, in a manner similar to a private sector business.

The statement of net position presents information on all the District's assets and deferred outflows and liabilities, with the difference between the two reported as net position. Over time, increases or decreases in net position may serve as a useful indicator of whether the financial position of the District is improving or deteriorating.

The statement of activities presents information showing how the District's net position changed during the year. All changes in net position are reported as soon as the underlying event giving rise to the change occurs, regardless of the timing of related cash flows. Thus, revenues and expenses are reported in this statement for some items that will only result in cash flows in future fiscal periods.

The government-wide financial statements can be found on pages 7 and 8 of this report.

Fund Financial Statements

A fund is a grouping of related accounts that is used to maintain control over resources that have been segregated for specific activities or objectives. The District has only one fund type: governmental funds.

Governmental funds are used to account for essentially the same functions reported as governmental activities in the government-wide financial statements. However, unlike the government-wide financial statements, governmental fund financial statements focus on near-term inflows and outflows of spendable resources, as well as balances of spendable resources available at the end of the year. Such information may be useful in evaluating a government's near-term financing requirements.

Because the focus of governmental funds is narrower than that of the government-wide financial statements, it is useful to compare the information presented for governmental funds with similar information presented for governmental activities in the government-wide financial statements. By doing so, readers may better understand the long-term impact of the District's near-term financing decisions. Both the governmental fund balance sheet and the statement of revenues, expenditures and changes in fund balances provide reconciliations to facilitate this comparison between governmental fund financial statements and government-wide financial statements.

The governmental fund financial statements can be found on pages 9 through 13 of this report.

Notes to Basic Financial Statements: The notes provide additional information that is essential for a full understanding of the data provided in the government-wide and fund financial statements. The notes to basic financial statements can be found on pages 14 through 22 of this report.

Government-Wide Financial Analysis

As noted earlier, net position may serve over time as a useful indicator of the District's financial position. The following table reflects the condensed government-wide statement of net position as of September 30, 2016 and 2015:

Park Place Community Development District
Statements of Net Position

	2016	2015
Assets:		
Current and other assets	$ 1,584,513	$ 1,432,448
Capital assets, net	8,159,082	8,459,319
Total assets	9,743,595	9,891,767
Deferred outflows of resources	376,858	400,277
Liabilities:		
Other liabilities	431,562	384,654
Long-term liabilities	5,905,000	6,145,000
Total liabilities	6,336,562	6,529,654
Net position:		
Net investment in capital assets	2,492,247	2,590,853
Restricted for debt service	138,021	112,105
Unrestricted	1,153,623	1,059,432
Total net position	$ 3,783,891	$ 3,762,390

Governmental Activities: Governmental activities for the year ended September 30, 2016 increased the District's net position by $ 21,501 as reflected in the table below:

Park Place Community Development District
Statements of Activities

	2016	2015
Revenues:		
Program revenue:		
Non-ad valorem assessments	$ 1,309,545	$ 1,281,382
General revenue:		
Interest income	136	56
Miscellaneous revenue	-	2,379
Total revenues	1,309,681	1,283,817
Expenses:		
Physical environment	853,319	893,449
Interest expense	312,098	273,386
General government	122,763	129,721
Total expenses	1,288,180	1,296,556
Change in net position	21,501	(12,739)
Net Position, Beginning of Year	3,762,390	3,775,129
Net Position, End of Year	$ 3,783,891	$ 3,762,390

Analysis of the Governmental Funds

As noted earlier, the District uses fund accounting to ensure and demonstrate compliance with finance-related legal requirements. The focus of the District's governmental funds is to provide information on near-term inflows, outflows, and balances of spendable resources. Such information is useful in assessing the District's financing requirements. In particular, unreserved fund balance may serve as a useful measure of a District's net resources available for spending at the end of the fiscal year. The General and Debt Service Funds comprise the total governmental funds.

As of the end of the most current fiscal year, the District's governmental funds reported combined ending fund balance of approximately $ 1,511,000 an increase of approximately $ 116,000, as compared to the total balance on October 1, 2015.

Capital Assets and Debt Administration

The District's investment in capital assets, less accumulated depreciation, for its governmental activities as of September 30, 2016 amounted to $ 8,159,082, and consists of land and improvements, infrastructure and buildings.

At the end of the year, the District had total bonded debt outstanding of $ 6,145,000. The District's debt represents bonds secured solely by a specified revenue source (i.e., revenue bonds).

Additional information on the District's long-term debt can be found in Note 5 on pages 20 through 22 of this report.

General Fund Budgetary Highlights

There were no amendments to the September 30, 2016 budget. Revenues and expenditures were over the adopted budget which resulted in a negative variance of $ 13,190 to budget.

Economic Factors and Next Year's Budget

The fiscal year 2017 adopted total revenues and expenditures for the General Fund of the District remain the same as 2016.

Requests for Information

This financial report is designed to provide a general overview of Park Place Community Development District's finances for all those with an interest. Questions concerning any of the information provided in this report or requests for additional information should be addressed to the Park Place Community Development District, 2005 Pan Am Circle, Suite 120, Tampa, Florida 33607.

BASIC
FINANCIAL STATEMENTS

Park Place Community Development District
Statement of Net Position
September 30, 2016

		Governmental Activities
Assets:		
Cash and cash equivalents	$	1,561,681
Assessments receivable		7,940
Prepaids		4,747
Deposits		10,145
Capital assets:		
Nondepreciable		1,861,517
Depreciable, net		6,297,565
Total assets		9,743,595
Deferred Outflows of Resources:		
Deferred charge on refunding		376,858
Liabilities:		
Accounts payable and accrued expenses		73,800
Accrued interest payable		117,762
Bonds payable, due within one year		240,000
Bonds payable, due in more than one year		5,905,000
Total liabilities		6,336,562
Net Position:		
Net investment in capital assets		2,492,247
Restricted for debt service		138,021
Unrestricted		1,153,623
Total net position	$	3,783,891

The accompanying notes to basic financial statements are an integral part of these statements.

Park Place Community Development District
Statement of Activities
For the Year Ended September 30, 2016

	Expenses	Program Revenues: Charges for Services	Program Revenues: Operating Grants and Contributions	Program Revenues: Capital Grants and Contributions	Governmental Activities: Net Revenues (Expenses) and Change in Net Position
Functions/Programs:					
Governmental activities:					
Physical environment	$ 853,319	$ 607,458	$ -	$ -	$ (245,861)
Interest and other debt service costs	312,098	535,804	-	-	223,706
General government	122,763	166,283	-	-	43,520
Total governmental activities	$ 1,288,180	$ 1,309,545	$ -	$ -	21,365
General revenues:					
Interest income					136
Change in net position					21,501
Net position, October 1, 2015					3,762,390
Net position, September 30, 2016					$ 3,783,891

The accompanying notes to basic financial statements are an integral part of these statements.

Park Place Community Development District
Balance Sheet - Governmental Funds
September 30, 2016

	General Fund	Series 2014 Debt Service Fund	Series 2008 Debt Service Fund	Total Governmental Funds
Assets:				
Cash and cash equivalents	$ 1,223,325	$ 173,707	$ 164,649	$ 1,561,681
Assessments receivable	7,940	-	-	7,940
Due from other funds	1,022	12,537	7,219	20,778
Prepaids	4,747	-	-	4,747
Deposits	10,145	-	-	10,145
Total assets	$ 1,247,179	$ 186,244	$ 171,868	$ 1,605,291
Liabilities:				
Accounts payable and accrued expenses	$ 73,800	$ -	$ -	$ 73,800
Due to other funds	19,756	1,022	-	20,778
Total liabilities	93,556	1,022	-	94,578
Fund Balances:				
Nonspendable	14,892	-	-	14,892
Restricted for debt service	-	185,222	171,868	357,090
Unassigned	1,138,731	-	-	1,138,731
Total fund balances	1,153,623	185,222	171,868	1,510,713
Total liabilities and fund balances	$ 1,247,179	$ 186,244	$ 171,868	$ 1,605,291

The accompanying notes to basic financial statements are an integral part of these statements.

Park Place Community Development District
Reconciliation of the Balance Sheet of Governmental Funds
to the Statement of Net Position
September 30, 2016

Total Fund Balances of Governmental Funds in the Balance Sheet, Page 9	$	1,510,713
Amounts reported for governmental activities in the statement of net position are difference because:		
Capital assets used in governmental activities are not financial resources and, therefore, are not reported in the funds:		
Governmental capital assets		12,549,712
Less accumulated depreciation		(4,390,630)
Certain liabilities are not due and payable in the current period and therefore are not reported in the funds:		
Accrued interest payable		(117,762)
Governmental bonds payable		(6,145,000)
Deferred charge on refunding		376,858
Net Position of Governmental Activities, Page 7	$	3,783,891

The accompanying notes to basic financial statements are an integral part of these statements.

Park Place Community Development District
Statement of Revenues, Expenditures and
Change in Fund Balances - Governmental Funds
For the Year Ended September 30, 2016

	General Fund	Series 2014 Debt Service Fund	Series 2008 Debt Service Fund	Total Governmental Funds
Revenues:				
Non-ad valorem assessments	$ 773,741	$ 340,011	$ 195,793	$ 1,309,545
Interest income	120	8	8	136
Total revenues	773,861	340,019	195,801	1,309,681
Expenditures:				
Current:				
General government	122,763	-	-	122,763
Physical environment	553,082	-	-	553,082
Debt service:				
Principal	-	140,000	85,000	225,000
Interest	-	188,100	104,901	293,001
Total expenditures	675,845	328,100	189,901	1,193,846
Excess of revenues over expenditures	98,016	11,919	5,900	115,835
Other Financing Sources (Uses):				
Transfer in		3,775	-	3,775
Transfer out	(3,775)	-	-	(3,775)
Total other financing sources (uses)	(3,775)	3,775	-	-
Net change in fund balances	94,241	15,694	5,900	115,835
Fund Balances, October 1, 2015	1,059,382	169,528	165,968	1,394,878
Fund Balances, September 30, 2016	$ 1,153,623	$ 185,222	$ 171,868	$ 1,510,713

The accompanying notes to basic financial statements are an integral part of these statements.

Park Place Community Development District
Reconciliation of the Statement of Revenues,
Expenditures and Changes in Fund Balances
of Governmental Funds to the Statement of Activities
For the Year Ended September 30, 2016

Net Changes in Fund Balances - Total Governmental Funds, Page 11	$	115,835
Amounts reported for governmental activities in the statement of activities are difference because:		
Governmental funds report capital outlays as expenditures. However, in the statement of activities, the cost of those assets is depreciated over their estimated useful lives:		
Expenditures for capital assets		67,136
Less current year proivison for depreciation		(367,373)
Repayment of debt principal is an expenditure in the governmental funds, but the repayment reduces long-term liabilities in the statement of net position.		225,000
Certain items reported in the statement of activities do not require the use of current financial resources and therefore are not reported as expenditures in the governmental funds:		
Change in accrued interest payable		4,322
Provision for amortization for deferred charge on refunding		(23,419)
Change in Net Position of Governmental Activities, Page 8	$	21,501

The accompanying notes to basic financial statements are an integral part of these statements.

Park Place Community Development District
Statement of Revenues, Expenditures and Changes in Fund Balance - Budget and Actual - General Fund
For the Year Ended September 30, 2016

	Original and Final Budget	Actual	Variance
Revenues:			
Non-ad valorem assessments	$ 747,172	$ 773,741	$ 26,569
Interest income	-	120	120
Total revenues	747,172	773,861	26,689
Expenditures:			
Current:			
General government	137,485	122,763	14,722
Physical environment	502,256	553,082	(50,826)
Total expenditures	639,741	675,845	(36,104)
Excess of revenues over expenditures	107,431	98,016	(9,415)
Other Financing Uses:			
Transfer out	-	(3,775)	(3,775)
Net change in fund balance	107,431	94,241	(13,190)
Fund Balance, October 1, 2015	956,946	1,059,382	102,436
Fund Balance, September 30, 2016	$ 1,064,377	$ 1,153,623	$ 89,246

The accompanying notes to basic financial statements are an integral part of these statements.

Note 1 - Organization and Operations

Park Place Community Development District (the "District") was created April 24, 2001, pursuant to the Uniform Community Development District Act of 1980, Chapter 190, Florida Statutes, by the Hillsborough County Board of County Commissioners. The District was created for the purposes of financing and managing the acquisition, construction, maintenance and operation of the infrastructure necessary for community development within its jurisdiction. The District is authorized to issue bonds for the purpose, among others, of financing, funding, planning, establishing, acquiring, constructing or reconstructing, enlarging or extending, equipping, operating and maintaining water management, water supply, sewer and wastewater management, bridges or culverts, roads, landscaping, street lights and other basic infrastructure projects within or without the boundaries of the Park Place Community Development District.

The District is governed by a Board of Supervisors, which is composed of five members. The Supervisors are elected on an at-large basis by the owners of property within the District. Ownership of land within the District entitles the owner to one vote per lot.

Note 2 - Summary of Significant Accounting Policies

The basic financial statements of the District have been prepared in conformity with generally accepted accounting principles as applied to governmental units. The District's more significant accounting policies are described below:

The financial reporting entity: The governmental reporting entity consists of the District and its component units. Component units are legally separate organizations for which the Board is financially accountable or other organizations whose nature and significant relationship with the District are such that exclusion would cause the District's financial statements to be misleading. Financial accountability is defined as the appointment of a voting majority of the component unit's board, and (i) either the District's ability to impose its will on the organization or (ii) there is a potential for the organization to provide benefit or impose a financial burden on the District. Based upon this criteria, there were no component units.

Basis of presentation

Financial Statements - Government-Wide Statements: The District's basic financial statements include both government-wide (reporting the District as a whole) and fund financial statements (reporting the District's major funds). Both the government-wide and fund financial statements categorize primary activities as either governmental or business type. All of the District's activities are classified as governmental activities.

In the government-wide statement of net position, the governmental activities column is presented on a consolidated basis, if applicable, and is reported on a full-accrual, economic resource basis, which recognizes all noncurrent assets and receivables as well as all noncurrent debt and obligations when and if applicable. The effect of interfund activity has been eliminated from the government-wide financial statements.

The government-wide statement of activities reports both the gross and net cost of each of the District's functions. The net costs, by function, are also supported by general revenues, other revenue, etc. The statement of activities reduces gross expenses by related program revenues, operating and capital grants. Program revenues must be directly associated with the function. Operating grants include operating-specific and discretionary (either operating or capital) grants while the capital grants column reflect capital-specific grants. For the year ended September 30, 2016 the District had $ 1,309,545 in program revenues.

Note 2 - Summary of Significant Accounting Policies (continued)

This government-wide focus is more on the ability to sustain the District as an entity and the change in the District's net position resulting from the current year's activities.

Financial Statements - Fund Financial Statements: The accounts of the District are organized on the basis of funds. The operations of the funds are accounted for with separate self-balancing accounts that comprise their assets, liabilities, fund equity, revenues and expenditures.

The District reports the following major governmental funds:

> **General Fund** - This fund is used to account for all operating activities of the District. At this time, revenues are derived principally from non-ad valorem assessments.
>
> **Debt Service Funds** - These funds are used to account for the accumulation of resources for and the payment of long-term debt principal, interest and other financing costs.

For the year ended September 30, 2016, the District does not report any proprietary funds.

Measurement focus, basis of accounting and presentation: Basis of accounting refers to the point at which revenues or expenditures/expenses are recognized in the accounts and reported in the basic financial statements. It relates to the timing of the measurements made regardless of the measurement focus applied. Governmental funds use the current financial resources measurement focus and the government-wide statements use the economic resources measurement focus.

Governmental activity in the government-wide financial statements is presented on the accrual basis of accounting. Revenues are recognized when earned and expenses are recognized when incurred.

The governmental fund financial statements are presented on the modified accrual basis of accounting under which revenue is recognized in the accounting period in which it becomes susceptible to accrual (i.e., when it becomes both measurable and available). "Measurable" means the amount of the transaction can be determined and "available" means collectible within the current period or soon enough thereafter to be used to pay liabilities of the current period. For this purpose, the District considers revenues to be available if they are collected within sixty days of the end of the current year.

As a general rule, the effect of interfund activity has been eliminated from the government-wide financial statements.

Budget: A budget is adopted for the General Fund and Debt Service Fund on an annual basis. Appropriations lapse at fiscal year-end. Changes or amendments to the total budgeted expenditures of the District must be approved by the District Board of Supervisors.

The District follows these procedures in establishing the budgetary data reflected in the financial statements:

a. Each year the District Manager submits to the District Board a proposed operating budget for the fiscal year commencing the following October 1.

Note 2 - Summary of Significant Accounting Policies (continued)

b. Public hearings are conducted to obtain taxpayer comments.

c. Prior to October 1, the budget is legally adopted by the District Board.

d. The budgets are adopted on a basis consistent with generally accepted accounting principles.

Cash and cash equivalents: Cash and cash equivalents are defined as demand deposits, money market accounts, and short-term investments with original maturities of three months or less from the date of acquisition.

Investments: Investments, if held, are stated at their fair value, which is based on quoted market prices and includes accrued interest, if applicable. Unrealized gains and losses in fair value are recognized. Certain money market investments are stated at amortized cost if they have a remaining maturity of one year or less when purchased.

Prepaids: Certain payments reflect costs applicable to future accounting periods and are recorded as prepaid items in both the government-wide and fund financial statements.

Capital assets: Capital assets, which include land and improvements, infrastructure and buildings are reported in the applicable governmental activities column in the government-wide financial statements. The government defines capital assets as assets with an initial, individual cost of more than $ 5,000 and an estimated useful life in excess of one year. Such assets are recorded at historical cost if purchased or constructed. Donated capital assets are recorded at estimated fair market value at the date of donation. Depreciation on all capital assets is charged to operations using the straight-line method over the assets' estimated service lives, ranging from 15-40 years.

The costs of normal maintenance and repairs that do not add to the value of the asset or materially extend asset lives are not capitalized.

Assessments: Operating and maintenance assessments are non-ad valorem assessments on all platted lots within the District.

Special assessments are levied in accordance with the bond indenture on all parcels of land within the District benefiting from infrastructure construction, and are used to repay bond principal and the interest thereon.

All assessments are due and payable on November 1. Assessments can be paid at declining discounts through February, are due by March 31, becoming delinquent on April 1 of the year following the year in which they were levied. The Hillsborough County, Florida Tax Collector's Office bills and collects assessments on behalf of the District.

Assessments and interest associated with the current fiscal year are considered to be susceptible to accrual and have been recognized as revenues in the current fiscal year. All other items are considered to be measurable and available only upon receipt by the District.

Note 2 - Summary of Significant Accounting Policies (continued)

Deferred outflows/inflows of resources: In addition to assets, the statement of financial position will sometimes report a separate section for deferred outflows of resources. This separate financial statement element, *deferred outflows of resources*, represents a consumption of net position that applies to a future period(s) and so will *not* be recognized as an outflow of resources (expense/expenditure) until then. The District only has one item that qualifies for reporting in this category. It is a deferred charge on refunding reported in government-wide statement of net position. A deferred charge on refunding results from the difference in the carrying value of refunded debt and its reacquisition price. This amount is deferred and amortized over the shorter of the life of the refunded or refunding debt.

In addition to liabilities, the statement of financial position will sometimes report a separate section for deferred inflows of resources. This separate financial statement element, *deferred inflows of resources*, represents an acquisition of net position that applies to a future period(s) and so will *not* be recognized as an inflow of resources (revenue) until that time. The District does not have any items that qualify for reporting in this category.

Equity classifications:

Government-wide statements

Equity is classified as net position and displayed in three components:

a. Net investment in capital assets - consists of capital assets including restricted capital assets, net of accumulated depreciation and reduced by the outstanding balances of any bonds or other borrowings that are attributable to the acquisition, construction or improvement of those assets.

b. Restricted - consists of net position with constraints placed on their use either by 1) external groups such as creditors, grantors, contributors, or laws or regulations of other governments, or 2) law through constitutional provisions or enabling legislation.

c. Unrestricted - indicates that portion of net position that does not meet the definition of "restricted" or "net investment in capital assets."

When both restricted and unrestricted resources are available for use, it is the District's policy to use restricted resources first, then unrestricted resources as they are needed.

Fund statements

GASB Statement No. 54, *Fund Balance Reporting and Governmental Fund Type Definitions* requires that governmental fund financial statements present fund balances based on classifications that comprise a hierarchy that is based primarily on the extent to which the District is bound to honor constraints on the specific purposes for which amounts in the respective governmental funds can be spent. The classifications used in the governmental fund financial statements are as follows:

Nonspendable: This classification includes amounts that cannot be spent because they are either (a) not in spendable form or (b) are legally or contractually required to be maintained intact. The District classifies prepaid items and deposits as nonspendable since they are not expected to be converted to cash or are not expected to be converted to cash within the next year.

Note 2 - Summary of Significant Accounting Policies (continued)

Restricted: This classification includes amounts for which constraints have been placed on the use of the resources either (a) externally imposed by creditors (such as through a debt covenant), grantors, contributors, or laws or regulations of other governments, or (b) imposed by law through constitutional provisions or enabling legislation.

Committed: This classification includes amounts that can be used only for specific purposes pursuant to constraints imposed by formal action of the District Board of Supervisors (the "Board"). These amounts cannot be used for any other purpose unless the Board removes or changes the specified use by taking the same type of action (ordinance or resolution) that was employed when the funds were initially committed. This classification also includes contractual obligations to the extent that existing resources have been specifically committed for use in satisfying those contractual requirements.

Assigned: This classification includes amounts that are constrained by the District's intent to be used for a specific purpose but are neither restricted nor committed. This intent can be expressed by the Board or through the Board delegating this responsibility to the District Manager through the budgetary process. This classification also includes the remaining positive fund balance for all governmental funds except for the General Fund. The District classifies existing fund balance to be used in the subsequent year's budget for elimination of a deficit as assigned.

Unassigned: This classification includes the residual fund balance for the General Fund.

The District would typically use restricted fund balances first, followed by committed fund balances, assigned fund balances, and finally unassigned.

Long-term obligations: Long-term debt and other long-term obligations are recorded as liabilities in the Statement of Net Position in the government-wide financial statements. Bonds payable are recorded net of premiums or discounts, which are amortized over the life of the bonds using the straight-line method.

In the fund financial statements, bond premiums and discounts are recognized in the period of the bond issuance. The face amount of the debt, plus premiums received on debt issuances are recorded as other financing sources, while discounts on debt issuances are recorded as other financing uses.

Estimates: The preparation of financial statements, in conformity with accounting principles generally accepted in the United States of America, requires management to make estimates and assumptions that affect the reported amounts of assets and liabilities and disclosure of contingent assets and liabilities at the date of the financial statements and the reported amounts of revenues and expenditures during the reporting period. Actual results could differ from the estimates.

Date of management review: Subsequent events have been evaluated through April 26, 2017, which is the date the financial statements were available to be issued.

Note 3 - Deposits and Investments

Deposits: The District's deposits must be placed with banks and savings and loan institutions which are qualified as public depositories under Chapter 280, Florida Statutes. These deposits are insured by the FDIC up to $ 250,000. Monies deposited in amounts greater than the insurance coverage are secured by the banks pledging securities with the State Treasurer in the collateral pool. At year end, the carrying amount of the District's deposits and the bank balance was $ 1,223,325.

Investments: The investment of funds is authorized by Florida Statutes, which allows the District to invest in the Local Government Surplus Funds Trust or any intergovernmental investment pool authorized pursuant to the Florida Interlocal Cooperation Act, SEC registered money market funds with the highest credit quality rating, interest-bearing time deposits or savings accounts in qualified public depositories and direct obligations of the United States Treasury. Investments of the Debt Service Funds are governed by the Bond Indenture.

Investments as of September 30, 2016 were as follows:

	Credit Rating*		Reported Amount - Fair Value or Amortized Cost
Money market funds	AAAm	$	338,356

* Investment ratings obtained from Standard & Poor's Investor Services

These deposits and investments are all classified as cash and cash equivalents on the balance sheet - governmental funds and the statement of net position.

Credit risk: Florida Statutes require the money market mutual funds held by the District to have the highest credit quality rating from a nationally recognized rating agency.

Interest rate risk: Florida Statutes state that the investment portfolio be structured in such manner as to provide sufficient liquidity to pay obligations as they come due. The money market mutual funds have a weighted average maturity of 43 days.

Custodial credit risk: For an investment, custodial credit risk is the risk that, in the event of the failure of the counterparty, the District will not be able to recover the value of its investments or collateral securities that are in the possession of an outside party. None of the District's investments are subject to custodial credit risk.

Note 4 - Capital Assets

Capital asset activity for the year ended September 30, 2016 was as follows:

	Balance at October 1, 2015	Additions	Deletions	Balance at September 30, 2016
Governmental Activities:				
Capital assets, not being depreciated:				
Land and improvements	$ 1,861,517	$ -	$ -	$ 1,861,517
Total capital assets, not being depreciated	1,861,517	-	-	1,861,517
Capital assets, being depreciated:				
Infrastructure	10,028,423	67,136	-	10,095,559
Buildings	592,636	-	-	592,636
Total capital assets, being depreciated	10,621,059	67,136	-	10,688,195
Total capital assets	12,482,576	67,136	-	12,549,712
Less accumulated depreciation for:				
Infrastructure	3,707,255	337,741	-	4,044,996
Buildings	316,002	29,632	-	345,634
Total accumulated depreciation	4,023,257	367,373	-	4,390,630
Total capital assets, being depreciated, net	6,597,802	(300,237)	-	6,297,565
Governmental activities capital assets, net	$ 8,459,319	$ (300,237)	$ -	$ 8,159,082

Provision for depreciation was charged to functions as follows:

Governmental Activities:	
Physical environment	$ 367,373

Note 5 - Long-Term Debt

a. Summary of Long-Term Debt of Governmental Activities

Long-term debt of the governmental activities at September 30, 2016 is comprised of the following bond issues:

$ 4,315,000 Special Assessment Refunding Bonds, Series 2014; due in annual installments through May 2034; interest payable semi-annually at 4.50%.	$ 4,040,000

Note 5 - Long-Term Debt (continued)

$ 2,680,000 Special Assessment Refunding Bonds, Series 2008; due in annual installments through May 2032; interest payable semi-annually at 4.79%.	2,105,000
	$ 6,145,000

The following is a summary of changes in governmental activities long-term debt for the year ended September 30, 2016:

	Balance October 1, 2015	Additions	Deletions	Balance September 30, 2016	Due Within One Year
Revenue Bonds, Series 2014	$ 4,180,000	$ -	$ 140,000	$ 4,040,000	$ 150,000
Refunding Bonds, Series 2008	2,190,000	-	85,000	2,105,000	90,000
	$ 6,370,000	$ -	$ 225,000	$ 6,145,000	$ 240,000

b. Summary of Significant Debt Terms of Governmental Activities

$ 2,680,000 Special Assessment Refunding Bonds, Series 2008 - The District previously issued $ 2,680,000 in Special Assessment Refunding Bonds, Series 2008 to provide funds which were applied together with other legally available funds to advance refund and redeem the District's Special Assessment Revenue Bonds, Series 2001. The Bonds are payable in annual principal installments through May 2032. Interest at 4.79% is payable semi-annually on the first day of each May and November. The bonds are secured by a pledge of revenues derived from the collection of non-ad valorem special assessments.

The District is required by the Bond Indenture to levy and collect special assessments pursuant to Florida Statutes, Section 190.022. The collection of these assessments is restricted and applied to the debt service requirements of the Bond Issue. Further, the District covenants to levy special assessments in annual amounts adequate to provide for payment of principal and interest on the Bonds as they become due.

The Bond Indenture requires a reserve fund equal to $ 18,966. As of September 30, 2016, the reserve fund account balance was sufficient to satisfy this requirement.

$ 4,315,000 Special Assessment Refunding Bonds, Series 2014 - The District previously issued $ 4,315,000 in Special Assessment Refunding Bonds, Series 2014 to provide funds which were applied together with other legally available funds to advance refund and redeem the District's Special Assessment Revenue Bonds, Series 2003. The Bonds are payable in annual principal installments through May 2034. Interest at 4.50% is payable semi-annually on the first day of each May and November. The bonds are secured by a pledge of revenues derived from the collection of non-ad valorem special assessments.

Note 5 - Long-Term Debt (continued)

The District is required by the Bond Indenture to levy and collect special assessments pursuant to Florida Statutes, Section 190.022. The collection of these assessments is restricted and applied to the debt service requirements of the Bond Issue. Further, the District covenants to levy special assessments in annual amounts adequate to provide for payment of principal and interest on the Bonds as they become due.

The Bond Indenture requires a reserve fund equal to $ 82,341. As of September 30, 2015, the reserve fund account balance was sufficient to satisfy this requirement.

c. The annual debt service requirements for the Special Assessment Refunding Bonds, Series 2014 and Series 2008 are as follows:

Year Ending September 30,	Principal	Interest	Total
2017	240,000	282,630	522,630
2018	250,000	271,569	521,569
2019	265,000	260,043	525,043
2020	275,000	247,828	522,828
2021	290,000	235,149	525,149
2022-2026	2,030,000	1,109,385	3,139,385
2027-2031	2,170,000	450,086	2,620,086
2032-2034	625,000	42,525	667,525
	$ 6,145,000	$ 2,899,215	$ 9,044,215

Note 6 - Risk Management

The District purchased an insurance policy that provided coverage of up to a $ 1,000,000 maximum for each general liability occurrence in combination with a maximum annual aggregate coverage of approximately $ 2,000,000 for the policy year ending September 30, 2016. Other insurance policies carried by the District during the year included automobile, public officials and property liability. Deductible amounts ranged from $ 0 to $ 5,000. Settlement amounts have not exceeded insurance coverage during the last three (3) fiscal years.

OTHER REPORTS OF INDEPENDENT AUDITORS

INDEPENDENT AUDITOR'S REPORT ON INTERNAL CONTROL OVER FINANCIAL REPORTING AND ON COMPLIANCE AND OTHER MATTERS BASED ON AN AUDIT OF FINANCIAL STATEMENTS PERFORMED IN ACCORDANCE WITH *GOVERNMENT AUDITING STANDARDS*

To the Board of Supervisors
Park Place Community Development District
Hillsborough County, Florida

We have audited, in accordance with the auditing standards generally accepted in the United States of America and the standards applicable to financial audits contained in *Government Auditing Standards* issued by the Comptroller General of the United States, the financial statements of the governmental activities, and each major fund, of Park Place Community Development District (the "District"), as of and for the year ended September 30, 2016, and the related notes to the financial statements, which collectively comprise the District's basic financial statements, and have issued our report thereon dated April 26, 2017.

Internal Control Over Financial Reporting

In planning and performing our audit of the financial statements, we considered the District's internal control over financial reporting (internal control) to determine the audit procedures that are appropriate in the circumstances for the purpose of expressing our opinions on the financial statements, but not for the purpose of expressing an opinion on the effectiveness of the District's internal control. Accordingly, we do not express an opinion on the effectiveness of the District's internal control.

A *deficiency in internal control* exists when the design or operation of a control does not allow management or employees, in the normal course of performing their assigned functions, to prevent, or detect and correct, misstatements on a timely basis. A *material weakness* is a deficiency, or a combination of deficiencies, in internal control, such that there is a reasonable possibility that a material misstatement of the entity's financial statements will not be prevented, or detected and corrected on a timely basis. A *significant deficiency* is a deficiency, or a combination of deficiencies, in internal control that is less severe than a material weakness, yet important enough to merit attention by those charged with governance.

Our consideration of internal control was for the limited purpose described in the first paragraph of this section and was not designed to identify all deficiencies in internal control that might be material weaknesses or, significant deficiencies. Given these limitations, during our audit we did not identify any deficiencies in internal control that we consider to be material weaknesses. However, material weaknesses may exist that have not been identified.

Compliance and Other Matters

As part of obtaining reasonable assurance about whether the District's financial statements are free from material misstatement, we performed tests of its compliance with certain provisions of laws, regulations, contracts, and grant agreements, noncompliance with which could have a direct and material effect on the determination of financial statement amounts. However, providing an opinion on compliance with those provisions was not an objective of our audit, and accordingly, we do not express such an opinion. The results of our tests disclosed no instances of noncompliance or other matters that are required to be reported under *Government Auditing Standards*.

Purpose of this Report

The purpose of this report is solely to describe the scope of our testing of internal control and compliance and the results of that testing, and not to provide an opinion on the effectiveness of the entity's internal control or on compliance. This report is an integral part of an audit performed in accordance with *Government Auditing Standards* in considering the District's internal control and compliance. Accordingly, this communication is not suitable for any other purpose.

Keefe McCullough

KEEFE McCULLOUGH

Fort Lauderdale, Florida
April 26, 2017

INDEPENDENT AUDITOR'S REPORT TO DISTRICT MANAGEMENT

To the Board of Supervisors
Park Place Community Development District
Hillsborough County, Florida

Report on the Financial Statements

We have audited the financial statements of Park Place Community Development District (the "District"), as of and for the year ended September 30, 2016, and have issued our report thereon dated April 26, 2017.

Auditor's Responsibility

We conducted our audit in accordance with auditing standards generally accepted in the United States of America and the standards applicable to financial audits contained in *Government Auditing Standards*, issued by the Comptroller General of the United States and Chapter 10.550, Rules of the Auditor General.

Other Reports

We have issued our Independent Auditor's Report on Internal Control over Financial Reporting and Compliance and Other Matters Based on an Audit of the Financial Statements Performed in Accordance with *Government Auditing Standards* and Independent Auditor's Report on an examination conducted in accordance with *AICPA Professional Standards*, Section 601, regarding compliance requirements in accordance with Chapter 10.550, Rules of the Auditor General. Disclosures in those reports, which are dated April 26, 2017, should be considered in conjunction with this management letter.

Prior Audit Findings

Section 10.554(1)(i)1., Rules of the Auditor General, requires that we determine whether or not corrective actions have been taken to address findings and recommendations made in the preceding annual financial audit report. There were no findings and recommendations made in the preceding annual financial audit report.

Official Title and Legal Authority

Section 10.554(1)(i)4., Rules of the Auditor General, requires that the name or official title and legal authority for the primary government and each component unit of the reporting entity be disclosed in this management letter, unless disclosed in the notes to the financial statements. The District was established April 24, 2001 by Hillsborough County Ordinance No. 01-12, pursuant to the provisions of Chapter 190, of the laws of the State of Florida. The District does not have any component units.

CPA's + Trusted Advisors

Financial Condition

Section 10.554(1)(i)5.a. and 10.556(7), Rules of the Auditor General, requires that we apply appropriate procedures and report the results of our determination as to whether or not the local governmental entity has met one or more of the conditions described in Section 218.503(1), Florida Statutes, and identification of the specific condition(s) met. In connection with our audit, we determined that the District did not meet any of the conditions described in Section 218.503(1), Florida Statutes.

Pursuant to Sections 10.554(1)(i)5.c. and 10.556(8), Rules of the Auditor General, we applied financial condition assessment procedures. It is management's responsibility to monitor the entity's financial condition, and our financial condition assessment was based in part on representations made by management and the review of financial information provided by same.

Annual Financial Report

Section 10.554(1)(i)5.b. and 10.556(7), Rules of the Auditor General, requires that we apply appropriate procedures and report the results of our determination as to whether the annual financial report for the District for the fiscal year ended September 30, 2016, filed with the Florida Department of Financial Services pursuant to Section 218.32(1)(a), Florida Statutes, is in agreement with the annual financial audit report for the fiscal year ended September 30, 2016. In connection with our audit, we determined that these two reports were in agreement.

Other Matters

Section 10.554(1)(i)2., Rules of the Auditor General, requires that we address in the management letter any recommendations to improve financial management. In connection with our audit, we did not have any such recommendations.

Section 10.554(1)(i)3., Rules of the Auditor General, requires that we address noncompliance with provisions of contracts or grant agreements, or abuse, that have occurred, or are likely to have occurred, that have an effect on the financial statements that is less than material but which warrants attention of those charged with governance. In connection with our audit, we did not have any such findings.

Purpose of this Letter

Our management letter is intended solely for the information and use of the Legislative Auditing Committee, members of the Florida Senate and the Florida House of Representatives, the Florida Auditor General, Federal and other granting agencies, the Board of Supervisors and applicable management, and is not intended to be and should not be used by anyone other than these specified parties.

Keefe McCullough

KEEFE McCULLOUGH

Fort Lauderdale, Florida
April 26, 2017

INDEPENDENT AUDITOR'S REPORT ON COMPLIANCE
WITH SECTION 218.415, FLORIDA STATUTES

To the Board of Supervisors
Park Place Community Development District
Hillsborough County, Florida

We have examined Park Place Community Development District's (the "District") compliance with the requirements of Section 218.415, Florida Statutes, Local Government Investment Policies, during the year ended September 30, 2016. Management is responsible for the District's compliance with those requirements. Our responsibility is to express an opinion on the District's compliance based on our examination.

Our examination was conducted in accordance with attestation standards established by the American Institute of Certified Public Accountants and, accordingly, included examining, on a test basis, evidence about the District's compliance with those requirements and performing such other procedures as we considered necessary in the circumstances. We believe that our examination provides a reasonable basis for our opinion. Our examination does not provide a legal determination on the District's compliance with specified requirements.

In our opinion, the District complied, in all material respects, with the aforementioned requirements for the year ended September 30, 2016.

This report is intended solely for the information and use of management and the State of Florida Auditor General and is not intended to be and should not be used by anyone other than these specified parties.

Keefe McCullough

KEEFE McCULLOUGH

Fort Lauderdale, Florida
April 26, 2017

RESOLUTION 2017-03

A RESOLUTION OF THE BOARD OF SUPERVISORS OF PARK PLACE COMMUNITY DEVELOPMENT DISTRICT DESIGNATING A TREASURER.

WHEREAS, Park Place Community Development District (hereinafter the "District") is a local unit of special-purpose government created and existing pursuant to Chapter 190, Florida Statutes, being situated entirely within Hillsborough County, Florida; and

WHEREAS, the Board of Supervisors of the District desires to appoint a Treasurer;

NOW, THEREFORE, BE IT RESOLVED BY THE BOARD OF SUPERVISORS OF PARK PLACE COMMUNITY DEVELOPMENT DISTRICT THAT:

Section 1. Eric Davidson is appointed Treasurer.

Section 2. All prior designations which are inconsistent with the designation herein are forthwith rescinded.

Section 3. This Resolution shall become effective on May 17, 2017.

PASSED AND ADOPTED THIS 17TH DAY OF MAY, 2017.

ATTEST:	**PARK PLACE COMMUNITY DEVELOPMENT DISTRICT**
_____	_____
SECRETARY / ASSISTANT SECRETARY	**CHAIRMAN**

April 20, 2017

Brian Lamb
Meritus
2005 Pan Am Circle, Suite 120
Tampa 33607

Dear Brian Lamb,

As per F.S. 190.006, you'll find the number of qualified registered electors for your Community Development District as of April 15, 2017, listed below.

Community Development District	Number of Registered Electors
Park Place	1467

We ask that you respond to our office with a current list of CDD office holders by **June 1, 2017**, and that you update us throughout the year if there are changes. This will enable us to provide accurate information to potential candidates during filing and qualifying periods.

Please note it is the responsibility of each district to keep our office updated with current district information. If you have any questions, please do not hesitate to contact me at (813) 384-3944 or ccampbell@hcsoe.org.

Respectfully,

Chelsea Campbell

Chelsea Campbell
Candidate Services Liaison

April 19, 2017 Minutes of Regular Meeting

MINUTES OF THE REGULAR MEETING

The Regular Meeting of the Board of Supervisors for Park Place Community Development District was held on Monday, April 19, 2017 at 4:00 p.m. at The Lake House, located at 11740 Casa Lago Lane, Tampa, Florida 33626.

1. CALL TO ORDER/ROLL CALL

Brian Howell called the Regular Meeting of the Board of Supervisors of the Park Place Community Development District to order on Monday, April 19, 2017 at 4:00 p.m.

Board Members Present and Constituting a Quorum:

Doris Cockerell	Chairman
Tony Jones	Vice Chairman
Cathy Kinser-Powell	Supervisor
Erica Lavina	Supervisor
Andrea Jackson	Supervisor

Staff Members Present:

Brian Howell	District Manager, Meritus	
Tonja Stewart	District Engineer	*via speakerphone*
John Wegner	Brightview	
Tim Gay	Holiday Lighting	

There were some audience members in attendance.

2. SUPERVISOR REQUESTS AND AUDIENCE QUESTIONS AND COMMENT ON AGENDA ITEMS

Audience members asked about pressure washing the wall in Mandolin/Windsor, ownership of the turf around the entrance pond in Mandolin/Windsor, storm water inspection, and the Citrus Park extension.

3. VENDOR AND STAFF REPORTS

A. District Engineer

Ms. Stewart went over her report. The Board discussed the call box sign and that it is not on a proper pole, nor is it in the correct location. Ms. Stewart will have it relocated and get a nicer pole. The Board reviewed the proposal for sign poles and signs along Race Track Road. Ms. Stewart went over requirements for the signs and recent changes to what is needed. The Board decided to table the decision for a future meeting so that more information can be sent out; they

DRAFT

will look to do the project this fall in the new budget season. Ms. Stewart then went over the striping proposal, and Board asked for more details on number of spaces and asked if it is correct. The Board decided that this too will be completed in the new budget year.

The Board asked Ms. Stewart to get some more preliminary information on possibly doing speed tables in Highland Park. Sidewalk repairs will start in 30 days, and drain repair brought up at the least meeting will be completed in next 30 days at a minimal cost. Ms. Stewart noted that she looked at an area where a resident thought a storm drain was damaging a driveway; however, she determined that there was no damage being caused by the drain/storm system.

4. BUSINESS ITEMS

A. Discussion on Thermo-Striping – Site Masters

B. Discussion on Race Track Road Signage – CPLM

C. Discussion on Citrus Park Drive Extension

Mr. Gay discussed holiday lighting with the Board. Mandolin/Windsor asked for wreaths in the towers at the estates and reserves; they have also asked Mr. Gay to investigate what made the lights trip continually last year. They would also like to decorate the entrance area at Countryway and Citrus Park. The Board asked Mr. Gay to come up with more options in Highland Park and to come up with options that have a Christmas tree. Mr. Howell will meet onsite with Mr. Gay and the fountain vendor to see if a Christmas tree can be installed at the fountain area this year.

Mr. Wegner stated that the Race Track Road project was permitted and work would commence in a couple of weeks. Mr. Wegner mentioned that the water had been shut off by a third party at the calf path; he will monitor the situation. Mandolin upgrades will commence within the next 10 days or so. The Board reminded Mr. Wegner that they want a price for boulders at the benches along with replacement plants. Mr. Wegner mentioned there have been a few irrigation breaks lately that were repaired. Mr. Wegner then went over upcoming water restrictions and asked Board if they would authorize revamping the entrance to Windsor Place so that it will tie in with the work that the Association is doing. The Board authorized this work, which will cost around $5,000. The Board then requested that Mr. Wegner check for ants, replace any holes in beds where a plant has died, and to answer some of their irrigation questions.

Supervisor Cockerell went over recent discussions with the County for the Citrus Park extension and stated that the County will be at the next CDD meeting to go over the project. Supervisor Cockerell noted the project had not yet been approved by the County and said that now is the time to ask for items to minimize the impact to the community. She asked Mr. Howell to assist with reaching out to representatives.

3. VENDOR AND STAFF REPORTS (cont.)

B. District Counsel

Mr. Howell noted that District Counsel had nothing to report.

DRAFT

4. BUSINESS ITEMS (cont.)

C. Consideration of Resolution 2017-01; Re-Designation of Officers

The Board discussed Resolution 2017-01.

MOTION TO:	Approve Resolution 2017-01 with Supervisor Cockerell Nominated as the Chair.
MADE BY:	Supervisor Lavina
SECONDED BY:	Supervisor Jones
DISCUSSION:	None further
RESULT:	Called to Vote: Motion PASSED
	5/0 - Motion passed unanimously

The Board continued to discuss re-designating officers.

MOTION TO:	Nominate Supervisor Jones as the Vice Chair.
MADE BY:	Supervisor Cockerell
SECONDED BY:	Supervisor Jackson
DISCUSSION:	None further
RESULT:	Called to Vote: Motion PASSED
	5/0 - Motion passed unanimously

D. General Matters of the District

5. BUSINESS ADMINISTRATION

A. Consideration of Minutes of the Board of Supervisors March 15, 2017

The Board reviewed the minutes and determined that line 59 needs a period and the meeting date needs to be changed from Monday to Wednesday.

MOTION TO:	Approve March 15, 2017 meeting minutes with changes as noted.
MADE BY:	Supervisor Cockerell
SECONDED BY:	Supervisor Lavina
DISCUSSION:	None further
RESULT:	Called to Vote: Motion PASSED
	5/0 - Motion passed unanimously

DRAFT

Supervisor Lavina briefly left the meeting.

B. Consideration of Operation & Maintenance Expenditures (Admin) April 2017

The Board went over the Admin O&Ms.

MOTION TO:	Approve the Operation & Maintenance Expenditures (Admin) April 2017.
MADE BY:	Supervisor Jones
SECONDED BY:	Supervisor Cockerell
DISCUSSION:	None further
RESULT:	Called to Vote: Motion PASSED
	4/0 - Motion passed unanimously

Supervisor Lavina returned to the meeting.

C. Consideration of Operation & Maintenance Expenditures (Highland Park) April 2017

The Board went over the Highland Park O&Ms.

MOTION TO:	Approve the Operation & Maintenance Expenditures (Highland Park) April 2017
MADE BY:	Supervisor Cockerell
SECONDED BY:	Supervisor Jackson
DISCUSSION:	The Board discussed the fountain and urn invoices, dog stations, the utilities being separated by HP/MW, Spearem, and TECO.
RESULT:	Called to Vote: Motion PASSED
	5/0 – Motion passed unanimously

D. Consideration of Operation & Maintenance Expenditures (Mandolin/Windsor) April 2017

The Board went over the Mandolin/Windsor O&Ms.

MOTION TO:	Approve the Operation & Maintenance Expenditures (Mandolin/Windsor) April 2017.
MADE BY:	Supervisor Kinser-Powell

DRAFT

SECONDED BY:	Supervisor Cockerell
DISCUSSION:	None further
RESULT:	Called to Vote: Motion PASSED
	5/0 - Motion passed unanimously

E. Review of Financial Statements Month Ending February 28, 2017

The financials were reviewed and accepted. Mr. Howell stated that the budget is right on track, and some items are even under budget currently. He also noted that most of the tax revenue has been collected and that next month is the budget meeting.

3. VENDOR AND STAFF REPORTS (cont.)

C. District Manager Report

i. Action Item List

Mr. Howell went over the picnic table proposals. The Board would like to go with one that matches the tables that are already in place but thought that the cost of $6,500 is quite a lot. The Board tabled this matter to next month's meeting for further discussion.

6. SUPERVISOR REQUESTS

There were no supervisor requests.

7. AUDIENCE QUESTION AND COMMENT ON OTHER ITEMS

There were no audience questions or comments on other items.

8. ADJOURNMENT

MOTION TO:	Adjourn at 5:45 p.m.
MADE BY:	Supervisor Cockerell
SECONDED BY:	Supervisor Kinser-Powell
DISCUSSION:	None further
RESULT:	Called to Vote: Motion PASSED
	5/0 - Motion passed unanimously

DRAFT

**These minutes were done in summary format.*

**Copy of audio tape available on request.*

**Each person who decides to appeal any decision made by the Board with respect to any matter considered at the meeting is advised that person may need to ensure that a verbatim record of the proceedings is made, including the testimony and evidence upon which such appeal is to be based.*

Meeting minutes were approved at a meeting by vote of the Board of Supervisors at a publicly noticed meeting held on _____.

_____	_____
Signature	**Signature**
_____	_____
Printed Name	**Printed Name**
Title:	**Title:**
□ **Chairman**	□ **Secretary**
□ **Vice Chairman**	□ **Assistant Secretary**

Recorded by Records Administrator

_____

Signature

_____

Date

Official District Seal

DRAFT

Park Place
Community Development District

Financial Statements
(Unaudited)

Period Ending
April 30, 2017

Meritus Districts
2005 Pan Am Circle ~ Suite 120 ~ Tampa, Florida 33607
Phone (813) 873-7300 ~ Fax (813) 873-7070

Meritus Corp
Park Place CDD

NOTES TO THE FINANCIAL STATEMENTS
FOR THE MONTH ENDED APRIL 2017

At the current time, we did not have access to the bank statements to show the reconciliation. Will be reflected in the following month.

April 2017 O&M was previously provided for viewing last month. Carrying forward we will be providing O&Ms related to the respective financials being presented. March and April Financials are attached.

---

1. Admin O&M Revenue Line 0001 Interest: budget needed.

2. Admin O&M Expense Line 4501 Professional Liability Insurance: budgeted for $1,800 but actual charge is $1,805.

3. Admin O&M Expense Line 4801 Legal Advertising: underbudgeted. Budget Line requires review/adjustment with Board for the current year and future years.

4. WM Expense Line 4577 Landscape Maintenance - Other: budgeted for $12,000 but there is an invoice for $11,785 and two other invoices for over $6,000 each. Budget Line requires review/adjustment with Board for the current year and future years.

5. WM O&M Expense Line 6403 Pressure Washing - Common Areas: budgeted for $2,000 but there are four invoices that average $855. Budget Line requires review/adjustment with Board for the current year and future years.

6. WM O&M Expense Line 4915 Holiday Decor: budgeted for $1,452 but the charge for holiday decorations is $4,000. Budget Line requires review/adjustment with Board for the current year and future years.

7. HP O&M Expense Line 4577 Landscape Maintenance - Other: budgeted for $12,348 but there are 3 invoices over $2,000 and 4 invoices over $1,000. Budget Line requires review/adjustment with Board for the current year and future years.

8. HP O&M Expense Line 4587 Irrigation Maintenance: budgeted for $9,375 but there is an invoice for $11,965. Budget Line requires review/adjustment with Board for the current year and future years.

9. HP O&M Expense Line 6403 Pressure Washing - Common Areas: underbudgeted. Budget Line requires review/adjustment with Board for the current year and future years.

10. HP O&M Expense Line 4915 Holiday Décor: budgeted for $750 but the charge for holiday decorations is $11,625. Budget Line requires review/adjustment with Board for the current year and future years.

11. HP O&M Expense Line 4601 Fountain Maintenance: budgeted for $63 but monthly charge has been $94 and then $167. Budget Line requires review/adjustment with Board for the current year and future years.

12. Mixed O&M Expense Line 4587 Irrigation Maintenance: budgeted for $3,125 but there is an invoice for $3,988. Budget Line requires review/adjustment with Board for the current year and future years.

13. Mixed O&M Expense Line 6403 Pressure Washing - Common Areas: underbudgeted. Budget Line requires review/adjustment with Board for the current year and future years.

14. Mixed O&M Expense Line 4915 Holiday Décor: budgeted for $250 but the charge for holiday decorations is $3,875. Budget Line requires review/adjustment with Board for the current year and future years.

15. Mixed O&M Expense Line 4601 Fountain Maintenance: budgeted for $21 but monthly charge has been $31 and then $56. Budget Line requires review/adjustment with Board for the current year and future years.

16. DS 08 Revenue Line 0001 Interest: budget needed.

17. DS 14 Revenue Line 0001 Interest: budget needed.

Park Place Community Development District

Balance Sheet

As of 4/30/2017

(In Whole Numbers)

	General Fund	Debt Service Fund - Series 2008	Debt Service Fund - Series 2014	Capital Projects Fund - Series 2003	General Fixed Assets Account Group	General Long-Term Debt Account Group	Total
Assets							
Cash-Operating Account 2	1,493,169	0	0	0	0	0	1,493,169
Cash-Operating Account	0	0	0	0	0	0	0
Cash-Interest Account Series 2001	0	0	0	0	0	0	0
Cash-Construction Account Series 2001	0	0	0	0	0	0	0
Cash-Revenue Account Series 2001	0	0	0	0	0	0	0
Cash-Construction Account-Series 2003	0	0	0	0	0	0	0
Cash-Revenue Account-Series 2003	0	0	0	0	0	0	0
Cash on Hand	0	0	0	0	0	0	0
Assessments Receivable-Tax Roll	0	0	0	0	0	0	0
Assessments Receivable-Developer	0	0	0	0	0	0	0
Accounts Receivable - Other	0	0	0	0	0	0	0
Assessments Receivable - Tax Roll	0	0	0	0	0	0	0
Assessments Receivable - Off Roll	0	0	0	0	0	0	0
Lot Closings Receivable	0	0	0	0	0	0	0
Due From General Fund	0	0	(0)	0	0	0	(0)
Due From Debt Service Fund	1,022	0	0	0	0	0	1,022
Due From Capital Projects Fund	0	0	0	0	0	0	0
Due From Developer	0	0	0	0	0	0	0
Interest Receivable	0	0	0	0	0	0	0
Other Receivables	0	0	0	0	0	0	0
Allowance for Uncollected Items	0	0	0	0	0	0	0
Investments-Interest Series 2001	0	0	0	0	0	0	0
Investments-Capitalized Interest Series 2001	0	0	0	0	0	0	0
Investments-Reserve Account Series 2001	0	0	0	0	0	0	0
Investments-Construction Series 2001	0	0	0	0	0	0	0
Investments-Revenue Account Series 2001	0	0	0	0	0	0	0
Investments-Interest Account Series 2003	0	0	0	0	0	0	0
Investments-Principal Account Series 2003	0	0	0	0	0	0	0
Investments-Reserve Account Series 2003	0	0	0	0	0	0	0
Investments-Cost of Issuance-Series 2003	0	0	0	0	0	0	0
Investments-Construction Series 2003	0	0	0	0	0	0	0
Investments-Prepayment Series 2003	0	0	0	0	0	0	0
Investments-Revenue-Series 2003	0	0	0	0	0	0	0

Park Place Community Development District

Balance Sheet

As of 4/30/2017

(In Whole Numbers)

	General Fund	Debt Service Fund - Series 2008	Debt Service Fund - Series 2014	Capital Projects Fund - Series 2003	General Fixed Assets Account Group	General Long-Term Debt Account Group	Total
Investments-Escrow Account-Series 2008	0	0	0	0	0	0	0
Investments-Reserve Account-Series 2008	0	18,966	0	0	0	0	18,966
Investments-Interest Account-Series 2008	0	0	0	0	0	0	0
Investments-Revenue Account Series 2008	0	289,190	0	0	0	0	289,190
Investments-COI-Series 2008	0	0	0	0	0	0	0
Investments-Sinking Fund Series 2008	0	0	0	0	0	0	0
Investments-Redemption Account Series 2008	0	0	0	0	0	0	0
Investments - Escrow Account - Series 2003	0	0	0	0	0	0	0
Investments-Revenue-Series 2014	0	0	345,843	0	0	0	345,843
Investments-Interest Account Series 2014	0	0	0	0	0	0	0
Investments-Sinking Fund Series 2014	0	0	0	0	0	0	0
Investments-Reserve Account Series 2014	0	0	82,341	0	0	0	82,341
Investments-Cost of Issuance Series 2014	0	0	0	0	0	0	0
Prepaid Items	6,774	0	0	0	0	0	6,774
Prepaid Property & General Liability Ins	0	0	0	0	0	0	0
Prepaid Trustee Fees	0	0	0	0	0	0	0
Prepaid Professional Liability Ins	0	0	0	0	0	0	0
Deposits - Utilities	10,145	0	0	0	0	0	10,145
Deposits - Miscellaneous	0	0	0	0	0	0	0
Land & Land Improvements	0	0	0	0	1,861,517	0	1,861,517
Recreational Facilities	0	0	0	0	592,636	0	592,636
Improvements Other Than Buildings	0	0	0	0	10,028,424	0	10,028,424
Ancillary Cost	0	0	0	0	392,150	0	392,150
Construction Work In Progress	0	0	0	0	0	0	0
Amount Available-Debt Service	0	0	0	0	0	686,969	686,969
Amount To Be Provided-Debt Service	0	0	0	0	0	5,453,031	5,453,031
Total Assets	1,511,110	308,156	428,184	0	12,874,726	6,140,000	21,262,176
Liabilities							
Accounts Payable	19,613	0	0	0	0	0	19,613
Accounts Payable - Other	0	0	0	0	0	0	0
Unallocated Tax Funds	0	0	0	0	0	0	0
Retainage Payable	0	0	0	0	0	0	0
Due To General Fund	0	0	1,022	0	0	0	1,022
Due To Debt Service Fund	0	0	0	0	0	0	0

Park Place Community Development District

Balance Sheet

As of 4/30/2017

(In Whole Numbers)

	General Fund	Debt Service Fund - Series 2008	Debt Service Fund - Series 2014	Capital Projects Fund - Series 2003	General Fixed Assets Account Group	General Long-Term Debt Account Group	Total
Due To Capital Projects Fund	0	0	0	0	0	0	0
Due to Developer	0	0	0	60	0	0	60
Deferred Revenue	0	0	0	0	0	0	0
Accrued Expenses Payable	0	0	0	0	0	0	0
Bank Loan Payable	0	0	0	0	0	0	0
Deposits	0	0	0	0	0	0	0
Revenue Bonds Payable--Series 2001	0	0	0	0	0	0	0
Revenue Bonds Payable--Series 2003	0	0	0	0	0	0	0
Refunding Bonds Payable--Series 2008	0	0	0	0	0	2,100,000	2,100,000
Revenue Bonds Payable--Series 2014	0	0	0	0	0	4,040,000	4,040,000
Total Liabilities	19,613	0	1,022	60	0	6,140,000	6,160,695
Fund Equity & Other Credits							
Fund Balance-All Other Reserves	0	171,869	185,221	(60)	0	0	357,030
Fund Balance-Unreserved	1,153,623	0	0	0	0	0	1,153,623
Investment In General Fixed Assets	0	0	0	0	12,874,726	0	12,874,726
Other	337,873	136,287	241,941	0	0	0	716,102
Total Fund Equity & Other Credits	1,491,496	308,156	427,162	(60)	12,874,726	0	15,101,481
Total Liabilities & Fund Equity	1,511,110	308,156	428,184	0	12,874,726	6,140,000	21,262,176

Park Place Community Development District

Statement of Revenues and Expenditures
001 - General Fund
From 10/1/2016 Through 4/30/2017
(In Whole Numbers)

	Total Budget - Original	Current Period Actual	Total Budget Variance - Original	Budget Percentage Remaining
Revenues				
Special Assessments-Service Charges - Admin				
O&M Assessments-Tax Roll	130,644	131,963	1,318	1 %
Interest Earnings				
Interest Earnings	0	101	101	0 %
Other Miscellaneous Revenues				
Undesignated Reserves	6,841	0	(6,841)	(100)%
Total Revenues	137,485	132,064	(5,421)	(4)%
Expenditures				
Legislative				
Supervisor Fees	12,000	5,000	7,000	58 %
Financial & Administrative				
Management Services	52,000	30,333	21,667	42 %
District Engineer	8,000	4,586	3,415	43 %
Disclosure Report	2,000	0	2,000	100 %
Trustees Fees	7,250	4,747	2,503	35 %
Auditing Services	7,000	0	7,000	100 %
Arbitrage Rebate Calculation	650	0	650	100 %
Financial Services	31,000	18,083	12,917	42 %
Postage and Resident Notices	750	83	667	89 %
Resident Newsletter	860	0	860	100 %
Professional Liability Insurance	1,800	1,805	(5)	(0)%
Legal Advertising	600	941	(341)	(57)%
Bank Fees	400	134	266	67 %
Dues, Licenses & Fees	175	175	0	0 %
Office Supplies	500	98	402	80 %
Website Development & Maintenance	1,000	0	1,000	100 %
Capital Improvements	2,000	0	2,000	100 %
Legal Counsel				
District Counsel	9,000	4,807	4,193	47 %
Other Physical Environment				
District Permit Compliance	500	0	500	100 %
Total Expenditures	137,485	70,792	66,693	49 %
Excess of Revenues Over (Under) Expenditures	0	61,272	61,272	0 %

Park Place Community Development District

Statement of Revenues and Expenditures
001 - General Fund
From 10/1/2016 Through 4/30/2017
(In Whole Numbers)

	Total Budget - Original	Current Period Actual	Total Budget Variance - Original	Budget Percentage Remaining
Revenues				
Special Assessments - Service Charges - W/M				
O&M Assessments-Tax Roll	215,224	217,396	2,171	1 %
Other Miscellaneous Revenues - W/M				
Undesignated Reserves	11,328	0	(11,328)	(100)%
Total Revenues	226,552	217,396	(9,156)	(4)%
Expenditures				
Electric Utility Services				
Electric Utility Services	40,000	18,044	21,956	55 %
Water-Sewer Combination Services				
Water Utility Services	1,600	569	1,031	64 %
Other Physical Environment				
Storm Drain Maintenance	7,500	0	7,500	100 %
General Liability Insurance	7,500	0	7,500	100 %
Plant Replacement Program	10,000	5,904	4,096	41 %
Landscape Maintenance - Contract	74,100	43,225	30,875	42 %
Landscape Maintenance - Other	12,000	38,096	(26,096)	(217)%
Aquatics Maintenance	13,000	7,000	6,000	46 %
Aquatics Maintenance - Other	4,000	0	4,000	100 %
Irrigation Maintenance	5,000	1,759	3,241	65 %
Entry & Walls Maintenance	4,000	404	3,596	90 %
Capital Improvements	13,540	0	13,540	100 %
Pressure Washing - Common Areas	2,000	3,598	(1,598)	(80)%
Roadway, Signage & Street Lights				
Pavement & Signage Repairs	5,000	0	5,000	100 %
Sidewalk Maintenance	4,000	1,700	2,300	58 %
Decorative Light Maintenance	8,500	1,576	6,924	81 %
Holiday Decor	1,452	4,000	(2,548)	(175)%
Reserves				
Transfer to Capital Reserves	13,360	0	13,360	100 %
Total Expenditures	226,552	125,875	100,677	44 %
Excess of Revenues Over (Under) Expenditures	0	91,521	91,521	0 %

Park Place Community Development District

Statement of Revenues and Expenditures
001 - General Fund
From 10/1/2016 Through 4/30/2017
(In Whole Numbers)

	Total Budget - Original	Current Period Actual	Total Budget Variance - Original	Budget Percentage Remaining
Revenues				
Special Assessments - Service Charges - H/P				
O&M Assessments-Tax Roll	288,519	293,677	5,158	2 %
Other Miscellaneous Revenues - H/P				
Undesignated Reserves	15,186	0	(15,186)	(100)%
Total Revenues	303,705	293,677	(10,028)	(3)%
Expenditures				
Electric Utility Services				
Electric Utility Services	5,500	3,425	2,075	38 %
Water-Sewer Combination Services				
Water Utility Services	4,000	3,735	265	7 %
Other Physical Environment				
Storm Drain Maintenance	13,000	0	13,000	100 %
General Liability Insurance	5,000	0	5,000	100 %
Plant Replacement Program	11,250	10,023	1,227	11 %
Plant Replacement Program - Racetrack Road	9,077	0	9,077	100 %
Landscape Maintenance - Other	12,348	13,545	(1,197)	(10)%
Landscape Installation/Maintenance - Race Track Rd	16,171	278	15,894	98 %
Aquatics Maintenance	26,205	15,486	10,719	41 %
Landscape Maintenance - Highland Park Contract	60,696	38,885	21,812	36 %
Landscape Maintenance - Racetrack Road Contract	17,946	10,469	7,478	42 %
Irrigation Maintenance	9,375	19,071	(9,696)	(103)%
Entry & Walls Maintenance	1,875	1,530	345	18 %
Pressure Washing - Common Areas	1,890	4,037	(2,147)	(114)%
Roadway, Signage & Street Lights				
Pavement & Signage Repairs	5,000	848	4,153	83 %
Sidewalk Maintenance	2,063	0	2,063	100 %
Street Light Maintenance	6,000	2,775	3,225	54 %
Decorative Light Maintenance	2,000	559	1,441	72 %
Holiday Decor	750	11,625	(10,875)	(1,450)%
Parks & Recreation				
Fountain Maintenance	750	914	(164)	(22)%
Park Facility Janitorial Maintenance Contracted	2,888	840	2,048	71 %
Park Facility Maintenance and Improvement	5,000	1,148	3,853	77 %
Reserves				
Transfer to Operating Reserve	62,421	0	62,421	100 %
Transfer to Capital Reserves	22,500	0	22,500	100 %
Total Expenditures	303,705	139,192	164,513	54 %
Excess of Revenues Over (Under) Expenditures	0	154,485	154,485	0 %

Park Place Community Development District

Statement of Revenues and Expenditures
001 - General Fund
From 10/1/2016 Through 4/30/2017
(In Whole Numbers)

	Total Budget - Original	Current Period Actual	Total Budget Variance - Original	Budget Percentage Remaining
Revenues				
Special Assessments - Service Charges - Mixed Use				
O&M Assessments-Tax Roll	75,458	76,219	761	1 %
Other Miscellaneous Revenues - Mixed Use				
Undesignated Reserves	3,972	0	(3,972)	(100)%
Total Revenues	79,430	76,219	(3,211)	(4)%
Expenditures				
Electric Utility Services				
Electric Utility Services	1,800	954	846	47 %
Water-Sewer Combination Services				
Water Utility Services	1,425	1,245	180	13 %
Other Physical Environment				
Storm Drain Maintenance	3,852	0	3,852	100 %
General Liability Insurance	1,650	0	1,650	100 %
Plant Replacement Program	3,750	3,341	409	11 %
Plant Replacement Program - Racetrack Road	3,026	0	3,026	100 %
Landscape Maintenance - Other	4,000	3,848	152	4 %
Landscape Installation/Maintenance - Race Track Rd	5,000	93	4,908	98 %
Aquatics Maintenance	8,735	5,162	3,573	41 %
Landscape Maintenance - Highland Park Contract	20,232	12,962	7,271	36 %
Landscape Maintenance - Racetrack Road Contract	5,982	3,490	2,493	42 %
Irrigation Maintenance	3,125	6,357	(3,232)	(103)%
Entry & Walls Maintenance	625	510	115	18 %
Pressure Washing - Common Areas	630	1,376	(746)	(118)%
Roadway, Signage & Street Lights				
Pavement & Signage Repairs	1,650	283	1,368	83 %
Sidewalk Maintenance	688	0	688	100 %
Street Light Maintenance	2,000	925	1,075	54 %
Decorative Light Maintenance	650	186	464	71 %
Holiday Decor	250	3,875	(3,625)	(1,450)%
Parks & Recreation				
Fountain Maintenance	250	355	(105)	(42)%
Park Facility Janitorial Maintenance Contracted	960	280	680	71 %
Park Facility Maintenance and Improvement	1,650	383	1,268	77 %
Reserves				
Transfer to Capital Reserves	7,500	0	7,500	100 %
Total Expenditures	79,430	45,623	33,807	43 %
Excess of Revenues Over (Under) Expenditures	0	30,596	30,596	0 %

Park Place Community Development District

Statement of Revenues and Expenditures
200 - Debt Service Fund - Series 2008
From 10/1/2016 Through 4/30/2017
(In Whole Numbers)

	Total Budget - Original	Current Period Actual	Total Budget Variance - Original	Budget Percentage Remaining
Revenues				
Special Assessments - Capital Improvements				
Debt Service Assesments-Tax Roll	188,674	191,575	2,901	2 %
Interest Earnings				
Interest Earnings	0	127	127	0 %
Total Revenues	188,674	191,702	3,028	2 %
Expenditures				
Debt Service Payments				
Interest Payments	98,674	50,415	48,259	49 %
Principal Payments	90,000	5,000	85,000	94 %
Total Expenditures	188,674	55,415	133,259	71 %
Excess of Revenues Over (Under) Expenditures	0	136,287	136,287	0 %

Park Place Community Development District

Statement of Revenues and Expenditures
201 - Debt Service Fund - Series 2014
From 10/1/2016 Through 4/30/2017
(In Whole Numbers)

	Total Budget - Original	Current Period Actual	Total Budget Variance - Original	Budget Percentage Remaining
Revenues				
Special Assessments - Capital Improvements				
Debt Service Assesments-Tax Roll	328,425	332,685	4,260	1 %
Interest Earnings				
Interest Earnings	0	156	156	0 %
Total Revenues	328,425	332,841	4,416	1 %
Expenditures				
Debt Service Payments				
Interest Payments	178,425	90,900	87,525	49 %
Principal Payments	150,000	0	150,000	100 %
Total Expenditures	328,425	90,900	237,525	72 %
Excess of Revenues Over (Under) Expenditures	0	241,941	241,941	0 %

Park Place Community Development District

Balance Sheet

As of 3/31/2017

(In Whole Numbers)

	General Fund	Debt Service Fund	Debt Service Fund - Series 2014	Capital Projects Fund - Series 2003	General Fixed Assets Account Group	General Long-Term Debt Account Group	Total
Assets							
Cash-Operating Account 2	1,518,570	0	0	0	0	0	1,518,570
Cash-Operating Account	0	0	0	0	0	0	0
Cash-Interest Account Series 2001	0	0	0	0	0	0	0
Cash-Construction Account Series 2001	0	0	0	0	0	0	0
Cash-Revenue Account Series 2001	0	0	0	0	0	0	0
Cash-Construction Account-Series 2003	0	0	0	0	0	0	0
Cash-Revenue Account-Series 2003	0	0	0	0	0	0	0
Cash on Hand	0	0	0	0	0	0	0
Assessments Receivable-Tax Roll	0	0	0	0	0	0	0
Assessments Receivable-Developer	0	0	0	0	0	0	0
Accounts Receivable - Other	0	0	0	0	0	0	0
Assessments Receivable - Tax Roll	0	0	0	0	0	0	0
Assessments Receivable - Off Roll	0	0	0	0	0	0	0
Lot Closings Receivable	0	0	0	0	0	0	0
Due From General Fund	0	0	(0)	0	0	0	(0)
Due From Debt Service Fund	1,022	0	0	0	0	0	1,022
Due From Capital Projects Fund	0	0	0	0	0	0	0
Due From Developer	0	0	0	0	0	0	0
Interest Receivable	0	0	0	0	0	0	0
Other Receivables	0	0	0	0	0	0	0
Allowance for Uncollected Items	0	0	0	0	0	0	0
Investments-Interest Series 2001	0	0	0	0	0	0	0
Investments-Capitalized Interest Series 2001	0	0	0	0	0	0	0
Investments-Reserve Account Series 2001	0	0	0	0	0	0	0
Investments-Construction Series 2001	0	0	0	0	0	0	0
Investments-Revenue Account Series 2001	0	0	0	0	0	0	0
Investments-Interest Account Series 2003	0	0	0	0	0	0	0
Investments-Principal Account Series 2003	0	0	0	0	0	0	0
Investments-Reserve Account Series 2003	0	0	0	0	0	0	0
Investments-Cost of Issuance-Series 2003	0	0	0	0	0	0	0
Investments-Construction Series 2003	0	0	0	0	0	0	0
Investments-Prepayment Series 2003	0	0	0	0	0	0	0
Investments-Revenue-Series 2003	0	0	0	0	0	0	0

Park Place Community Development District

Balance Sheet

As of 3/31/2017

(In Whole Numbers)

	General Fund	Debt Service Fund	Debt Service Fund - Series 2014	Capital Projects Fund - Series 2003	General Fixed Assets Account Group	General Long-Term Debt Account Group	Total
Investments-Escrow Account-Series 2008	0	0	0	0	0	0	0
Investments-Reserve Account-Series 2008	0	18,966	0	0	0	0	18,966
Investments-Interest Account-Series 2008	0	0	0	0	0	0	0
Investments-Revenue Account Series 2008	0	282,861	0	0	0	0	282,861
Investments-COI-Series 2008	0	0	0	0	0	0	0
Investments-Sinking Fund Series 2008	0	0	0	0	0	0	0
Investments-Redemption Account Series 2008	0	0	0	0	0	0	0
Investments - Escrow Account - Series 2003	0	0	0	0	0	0	0
Investments-Revenue-Series 2014	0	0	334,877	0	0	0	334,877
Investments-Interest Account Series 2014	0	0	0	0	0	0	0
Investments-Sinking Fund Series 2014	0	0	0	0	0	0	0
Investments-Reserve Account Series 2014	0	0	82,341	0	0	0	82,341
Investments-Cost of Issuance Series 2014	0	0	0	0	0	0	0
Prepaid Items	6,943	0	0	0	0	0	6,943
Prepaid Property & General Liability Ins	0	0	0	0	0	0	0
Prepaid Trustee Fees	0	0	0	0	0	0	0
Prepaid Professional Liability Ins	0	0	0	0	0	0	0
Deposits - Utilities	10,145	0	0	0	0	0	10,145
Deposits - Miscellaneous	0	0	0	0	0	0	0
Land & Land Improvements	0	0	0	0	1,861,517	0	1,861,517
Recreational Facilities	0	0	0	0	592,636	0	592,636
Improvements Other Than Buildings	0	0	0	0	10,028,424	0	10,028,424
Ancillary Cost	0	0	0	0	392,150	0	392,150
Construction Work In Progress	0	0	0	0	0	0	0
Amount Available-Debt Service	0	0	0	0	0	686,969	686,969
Amount To Be Provided-Debt Service	0	0	0	0	0	5,453,031	5,453,031
Total Assets	1,536,680	301,828	417,218	0	12,874,726	6,140,000	21,270,452
Liabilities							
Accounts Payable	10,864	0	0	0	0	0	10,864
Accounts Payable - Other	0	0	0	0	0	0	0
Unallocated Tax Funds	0	0	0	0	0	0	0
Retainage Payable	0	0	0	0	0	0	0
Due To General Fund	0	0	1,022	0	0	0	1,022
Due To Debt Service Fund	0	0	0	0	0	0	0

Park Place Community Development District

Balance Sheet

As of 3/31/2017

(In Whole Numbers)

	General Fund	Debt Service Fund	Debt Service Fund - Series 2014	Capital Projects Fund - Series 2003	General Fixed Assets Account Group	General Long-Term Debt Account Group	Total
Due To Capital Projects Fund	0	0	0	0	0	0	0
Due to Developer	0	0	0	60	0	0	60
Deferred Revenue	0	0	0	0	0	0	0
Accrued Expenses Payable	0	0	0	0	0	0	0
Bank Loan Payable	0	0	0	0	0	0	0
Deposits	0	0	0	0	0	0	0
Revenue Bonds Payable--Series 2001	0	0	0	0	0	0	0
Revenue Bonds Payable--Series 2003	0	0	0	0	0	0	0
Refunding Bonds Payable--Series 2008	0	0	0	0	0	2,100,000	2,100,000
Revenue Bonds Payable--Series 2014	0	0	0	0	0	4,040,000	4,040,000
Total Liabilities	10,864	0	1,022	60	0	6,140,000	6,151,946
Fund Equity & Other Credits							
Fund Balance-All Other Reserves	0	171,869	185,221	(60)	0	0	357,030
Fund Balance-Unreserved	1,153,623	0	0	0	0	0	1,153,623
Investment In General Fixed Assets	0	0	0	0	12,874,726	0	12,874,726
Other	372,193	129,959	230,975	0	0	0	733,127
Total Fund Equity & Other Credits	1,525,816	301,828	416,196	(60)	12,874,726	0	15,118,506
Total Liabilities & Fund Equity	1,536,680	301,828	417,218	0	12,874,726	6,140,000	21,270,452

Park Place Community Development District

Statement of Revenues and Expenditures
001 - General Fund
From 10/1/2016 Through 3/31/2017
(In Whole Numbers)

	Total Budget - Original	Current Period Actual	Total Budget Variance - Original	Budget Percentage Remaining
Revenues				
Special Assessments-Service Charges - Admin				
O&M Assessments-Tax Roll	130,644	127,648	(2,996)	(2)%
Interest Earnings				
Interest Earnings	0	101	101	0 %
Other Miscellaneous Revenues				
Undesignated Reserves	6,841	0	(6,841)	(100)%
Total Revenues	137,485	127,750	(9,735)	(7)%
Expenditures				
Legislative				
Supervisor Fees	12,000	4,000	8,000	67 %
Financial & Administrative				
Management Services	52,000	26,000	26,000	51 %
District Engineer	8,000	4,586	3,415	43 %
Disclosure Report	2,000	0	2,000	100 %
Trustees Fees	7,250	4,747	2,503	35 %
Auditing Services	7,000	0	7,000	100 %
Arbitrage Rebate Calculation	650	0	650	100 %
Financial Services	31,000	15,500	15,500	51 %
Postage and Resident Notices	750	57	693	92 %
Resident Newsletter	860	0	860	100 %
Professional Liability Insurance	1,800	1,805	(5)	(0)%
Legal Advertising	600	941	(341)	(57)%
Bank Fees	400	134	266	67 %
Dues, Licenses & Fees	175	175	0	0 %
Office Supplies	500	98	402	80 %
Website Development & Maintenance	1,000	0	1,000	100 %
Capital Improvements	2,000	0	2,000	100 %
Legal Counsel				
District Counsel	9,000	3,862	5,138	57 %
Other Physical Environment				
District Permit Compliance	500	0	500	100 %
Total Expenditures	137,485	61,904	75,581	55 %
Excess of Revenues Over (Under) Expenditures	0	65,846	65,846	0 %

Park Place Community Development District

Statement of Revenues and Expenditures
001 - General Fund
From 10/1/2016 Through 3/31/2017
(In Whole Numbers)

	Total Budget - Original	Current Period Actual	Total Budget Variance - Original	Budget Percentage Remaining
Revenues				
Special Assessments - Service Charges - W/M				
O&M Assessments-Tax Roll	215,224	210,289	(4,936)	(2)%
Other Miscellaneous Revenues - W/M				
Undesignated Reserves	11,328	0	(11,328)	(100)%
Total Revenues	226,552	210,289	(16,263)	(7)%
Expenditures				
Electric Utility Services				
Electric Utility Services	40,000	14,516	25,484	64 %
Water-Sewer Combination Services				
Water Utility Services	1,600	496	1,104	69 %
Other Physical Environment				
Storm Drain Maintenance	7,500	0	7,500	100 %
General Liability Insurance	7,500	0	7,500	100 %
Plant Replacement Program	10,000	5,904	4,096	41 %
Landscape Maintenance - Contract	74,100	37,050	37,050	50 %
Landscape Maintenance - Other	12,000	21,326	(9,326)	(78)%
Aquatics Maintenance	13,000	6,000	7,000	54 %
Aquatics Maintenance - Other	4,000	0	4,000	100 %
Irrigation Maintenance	5,000	1,495	3,505	70 %
Entry & Walls Maintenance	4,000	404	3,596	90 %
Capital Improvements	13,540	0	13,540	100 %
Pressure Washing - Common Areas	2,000	178	1,822	91 %
Roadway, Signage & Street Lights				
Pavement & Signage Repairs	5,000	0	5,000	100 %
Sidewalk Maintenance	4,000	1,700	2,300	58 %
Decorative Light Maintenance	8,500	1,576	6,924	81 %
Holiday Decor	1,452	4,000	(2,548)	(175)%
Reserves				
Transfer to Capital Reserves	13,360	0	13,360	100 %
Total Expenditures	226,552	94,645	131,907	58 %
Excess of Revenues Over (Under) Expenditures	0	115,644	115,644	0 %

Park Place Community Development District

Statement of Revenues and Expenditures
001 - General Fund
From 10/1/2016 Through 3/31/2017
(In Whole Numbers)

	Total Budget - Original	Current Period Actual	Total Budget Variance - Original	Budget Percentage Remaining
Revenues				
Special Assessments - Service Charges - H/P				
O&M Assessments-Tax Roll	288,519	284,076	(4,443)	(2)%
Other Miscellaneous Revenues - H/P				
Undesignated Reserves	15,186	0	(15,186)	(100)%
Total Revenues	303,705	284,076	(19,629)	(6)%
Expenditures				
Electric Utility Services				
Electric Utility Services	5,500	2,908	2,592	47 %
Water-Sewer Combination Services				
Water Utility Services	4,000	3,393	608	15 %
Other Physical Environment				
Storm Drain Maintenance	13,000	0	13,000	100 %
General Liability Insurance	5,000	0	5,000	100 %
Plant Replacement Program	11,250	10,023	1,227	11 %
Plant Replacement Program - Racetrack Road	9,077	0	9,077	100 %
Landscape Maintenance - Other	12,348	13,545	(1,197)	(10)%
Landscape Installation/Maintenance - Race Track Rd	16,171	278	15,894	98 %
Aquatics Maintenance	26,205	13,802	12,403	47 %
Landscape Maintenance - Highland Park Contract	60,696	33,291	27,405	45 %
Landscape Maintenance - Racetrack Road Contract	17,946	8,973	8,973	50 %
Irrigation Maintenance	9,375	17,245	(7,870)	(84)%
Entry & Walls Maintenance	1,875	1,530	345	18 %
Pressure Washing - Common Areas	1,890	3,655	(1,765)	(93)%
Roadway, Signage & Street Lights				
Pavement & Signage Repairs	5,000	668	4,333	87 %
Sidewalk Maintenance	2,063	0	2,063	100 %
Street Light Maintenance	6,000	2,486	3,515	59 %
Decorative Light Maintenance	2,000	142	1,858	93 %
Holiday Decor	750	11,625	(10,875)	(1,450)%
Parks & Recreation				
Fountain Maintenance	750	745	5	1 %
Park Facility Janitorial Maintenance Contracted	2,888	630	2,258	78 %
Park Facility Maintenance and Improvement	5,000	968	4,033	81 %
Reserves				
Transfer to Operating Reserve	62,421	0	62,421	100 %
Transfer to Capital Reserves	22,500	0	22,500	100 %
Total Expenditures	303,705	125,906	177,799	59 %
Excess of Revenues Over (Under) Expenditures	0	158,170	158,170	0 %

Park Place Community Development District

Statement of Revenues and Expenditures
001 - General Fund
From 10/1/2016 Through 3/31/2017
(In Whole Numbers)

	Total Budget - Original	Current Period Actual	Total Budget Variance - Original	Budget Percentage Remaining
Revenues				
Special Assessments - Service Charges - Mixed Use				
O&M Assessments-Tax Roll	75,458	73,727	(1,731)	(2)%
Other Miscellaneous Revenues - Mixed Use				
Undesignated Reserves	3,972	0	(3,972)	(100)%
Total Revenues	79,430	73,727	(5,703)	(7)%
Expenditures				
Electric Utility Services				
Electric Utility Services	1,800	781	1,019	57 %
Water-Sewer Combination Services				
Water Utility Services	1,425	1,131	294	21 %
Other Physical Environment				
Storm Drain Maintenance	3,852	0	3,852	100 %
General Liability Insurance	1,650	0	1,650	100 %
Plant Replacement Program	3,750	3,341	409	11 %
Plant Replacement Program - Racetrack Road	3,026	0	3,026	100 %
Landscape Maintenance - Other	4,000	3,848	152	4 %
Landscape Installation/Maintenance - Race Track Rd	5,000	93	4,908	98 %
Aquatics Maintenance	8,735	4,601	4,134	47 %
Landscape Maintenance - Highland Park Contract	20,232	11,097	9,135	45 %
Landscape Maintenance - Racetrack Road Contract	5,982	2,991	2,991	50 %
Irrigation Maintenance	3,125	5,748	(2,623)	(84)%
Entry & Walls Maintenance	625	510	115	18 %
Pressure Washing - Common Areas	630	1,248	(618)	(98)%
Roadway, Signage & Street Lights				
Pavement & Signage Repairs	1,650	223	1,428	87 %
Sidewalk Maintenance	688	0	688	100 %
Street Light Maintenance	2,000	829	1,172	59 %
Decorative Light Maintenance	650	47	603	93 %
Holiday Decor	250	3,875	(3,625)	(1,450)%
Parks & Recreation				
Fountain Maintenance	250	298	(48)	(19)%
Park Facility Janitorial Maintenance Contracted	960	210	750	78 %
Park Facility Maintenance and Improvement	1,650	323	1,328	80 %
Reserves				
Transfer to Capital Reserves	7,500	0	7,500	100 %
Total Expenditures	79,430	41,193	38,237	48 %
Excess of Revenues Over (Under) Expenditures	0	32,534	32,534	0 %

Park Place Community Development District

Statement of Revenues and Expenditures
200 - Debt Service Fund - Series 2008
From 10/1/2016 Through 3/31/2017
(In Whole Numbers)

	Total Budget - Original	Current Period Actual	Total Budget Variance - Original	Budget Percentage Remaining
Revenues				
Special Assessments - Capital Improvements				
Debt Service Assesments-Tax Roll	188,674	185,312	(3,362)	(2)%
Interest Earnings				
Interest Earnings	0	61	61	0 %
Total Revenues	188,674	185,374	(3,300)	(2)%
Expenditures				
Debt Service Payments				
Interest Payments	98,674	50,415	48,259	49 %
Principal Payments	90,000	5,000	85,000	94 %
Total Expenditures	188,674	55,415	133,259	71 %
Excess of Revenues Over (Under) Expenditures	0	129,959	129,959	0 %

Park Place Community Development District

Statement of Revenues and Expenditures
201 - Debt Service Fund - Series 2014
From 10/1/2016 Through 3/31/2017
(In Whole Numbers)

	Total Budget - Original	Current Period Actual	Total Budget Variance - Original	Budget Percentage Remaining
Revenues				
Special Assessments - Capital Improvements				
Debt Service Assesments-Tax Roll	328,425	321,809	(6,616)	(2)%
Interest Earnings				
Interest Earnings	0	66	66	0 %
Total Revenues	328,425	321,875	(6,550)	(2)%
Expenditures				
Debt Service Payments				
Interest Payments	178,425	90,900	87,525	49 %
Principal Payments	150,000	0	150,000	100 %
Total Expenditures	328,425	90,900	237,525	72 %
Excess of Revenues Over (Under) Expenditures	0	230,975	230,975	0 %